NIDEK

NON CONTACT TONOMETER

NT-510

OPERATOR'S MANUAL

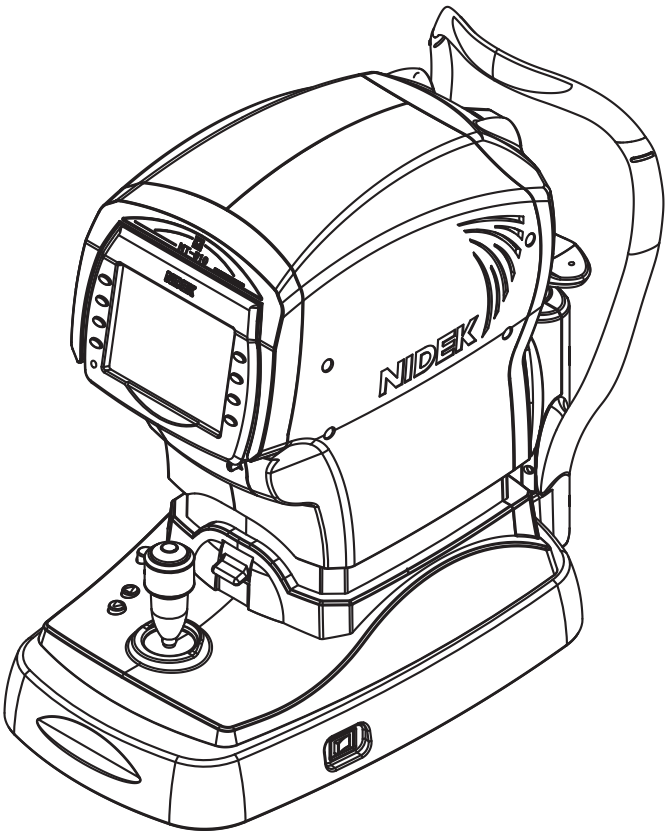

Original instructions

Eye & Health Care

NIDEK CO., LTD.

NIDEK CO., LTD. **(Manufacturer)**	: 34-14, Maehama, Hiroishi-cho, Gamagori, Aichi 443-0038, Japan Telephone: +81-533-67-6611 Facsimile: +81-533-67-6610
NIDEK CO., LTD. **(Tokyo Office)**	: 3F Sumitomo Fudosan Hongo Bldg., 3-22-5, Hongo, Bunkyo-Ku, Tokyo 113-0033, Japan Telephone: +81-3-5844-2641 Facsimile: +81-3-5844-2642
NIDEK INCORPORATED **(United States Agent)**	: 47651 Westinghouse Drive, Fremont, California 94539, U. S. A. Telephone: +1-510-226-5700 Facsimile: +1-510-226-5750
NIDEK S.A. **(EU Authorized Representative)**	: Europarc 13, rue Auguste Perret, 94042 Créteil, France Telephone: +33-1-49 80 97 97 Facsimile: +33-1-49 80 32 08

April 2012
18536-P902F
Printed in Japan

Use this device properly and safely.

⚠ BEFORE USE, READ THIS MANUAL.

This operator's manual contains information necessary for the operation of the NIDEK NON CONTACT TONOMETER Model NT-510. This manual includes the operating procedures, safety precautions, and specifications.

This manual is necessary for proper use. Especially, the safety precautions and operating procedures must be thoroughly understood prior to operation of the device.

Keep this manual handy to verify use whenever necessary.

The device complies with ISO 8612: 2009 (Ophthalmic instruments-Tonometers).

There are no parts within the device that requires servicing by the user other than printer paper.

If you encounter any problems or have questions about the device, please contact NIDEK or your authorized distributor.

"CAUTION! Federal Law (US) restricts this device to sale by or on the order of a properly licensed practitioner."

Safety precautions

In this manual, signal words are used to designate the degree or level of safety alerting. The definitions are as follows.

⚠ **WARNING** • Indicates a potentially hazardous situation which, if not avoided, may result in death or serious injury.

⚠ **CAUTION** • Indicates a potentially hazardous situation which, if not avoided, may result in minor or moderate injury or property damage accident.

Even situations indicated by "⚠CAUTION" may result in serious injury under certain conditions. Safety precautions must be strictly followed at all times.

Usage precautions

Safety of LED

⚠ **CAUTION**

- **The device is a Class 1 LED product in accordance with IEC60825-1: 1993+A1: 1997+A2: 2001 and the LED used for the device is safe in expected use conditions including situations such as looking into the LED using an optical system. However, it is recommended to observe the following precautions when using the device:**
  1) Do not direct LED beams to human eyes when unnecessary.
  2) Do not look into the objective lens (aperture) for a long period of time for observation.
  3) If the device cannot be used properly or any device problem cannot be solved, immediately stop using the device, then contact NIDEK or your authorized distributor.

Before Use

⚠ **WARNING**

- **Connect the power plug to a ground outlet. Or connect a grounding wire to a ground terminal.**
  Electric shock or fire may occur in the event of device malfunction or power leakage.

⚠ **CAUTION**

- **Do not use the device for other than the intended purpose.**
  NIDEK is not responsible for accidents or malfunctions caused by misuse.
- **Be sure to read the manual prior to operation of the device to understand the safety precautions and operating procedures thoroughly.**
  Using the device for purposes other than specified in this manual may cause unexpected malfunctions and/or adverse events.
- **Never modify nor touch the internal structure of the device.**
  Electric shock or malfunction may result.
- **Install the device in an environment that meets the following conditions. The following conditions must be maintained during use.**
  Use conditions
  Temperature: 10 to 35°C (50 to 95°F)
  Humidity: 30 to 90% (Non-condensing)
  Pressure: 800 to 1060 hPa
  A place not exposed to water
  A place with low dust
  A place with little external light
  A level and stable surface free from vibration and shock
  If the device is not installed and used under the above conditions, the reliability of measured results is impaired, and malfunction may result. In addition, there is a possibility of injury if the device receives shock and falls down.
- **Avoid installing the device near sunny windows or directly under a light.**
  Intense light entering the observation window in the air nozzle may interfere with proper measurement.

⚠ **CAUTION**

- **Install the device in an environment where no contaminants such as corrosive gas, acid, or salt is contained in the air.**
  Corrosion or malfunction of the device may result.
- **Avoid installing the device where it is exposed to direct air-conditioning flow.**
  Changes in temperature may result in condensation inside the device or adversely affect measurements.
- **Be sure to use a wall outlet which meets the power specification requirements.**
  If the line voltage is too high or too low, the device may not perform properly. Malfunction or fire may occur.
- **Completely insert the power plug into the outlet as far as the prongs will go.**
  Fire may occur if the device is used with a loose connection.
- **Never use a table tap or extension cable to supply the device with power.**
  The electrical safety may be lowered.
- **Do not use a power cord other than the one supplied. Also do not connect the supplied power cord to any other device.**
  Failure or fire may result.
- **Do not place heavy objects on the power cord.**
  The damaged power cord may cause fire or electric shock.
- **Before connecting cables to the device, turn the device off and disconnect the power cord from an outlet.**
  Malfunction may result.
- **Install the device in area where the outlet that the mains plug is inserted into is easily accessible during use. In addition, ensure that the power cord can be disconnected without the use of a tool.**
  Otherwise, it may interfere with disconnecting of the power from the input power source in case of abnormality.
- **Before carrying the device, put the device into the packing mode and lock the main body to the base with the locking lever.**
  An accidental movement of the measuring unit during transportation may result in malfunction.
- **When the device is carried, avoid holding the forehead rest and the main body; hold the bottom of the base.**
  If areas other than the base are held and the device falls, there is a fear of injury or malfunction.

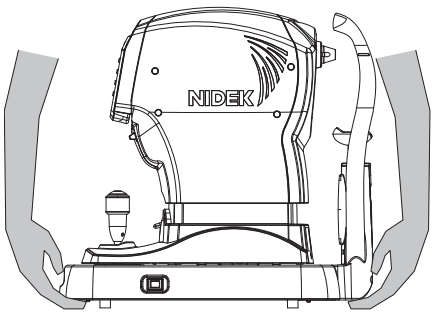

- **Install the device in a place that is not exposed to high electromagnetic wave when in use.**

⚠ **CAUTION**

- **This device has been tested and found to comply with the limits for medical devices to the IEC 60601-1-2: 2007.**
  These limits are designed to provide reasonable protection against harmful interference in a standard medical installation.
  This device generates, uses and can radiate radio frequency energy and, if not installed and used in accordance with the instructions, may cause harmful interference to other devices in the vicinity.
  However, there is no guarantee that interference will not occur in a particular installation.
  If this device does cause harmful interference to other devices, which can be determined by turning the device off and on, the user is encouraged to try to correct the interference by one or more of the following measures:
  - Reorient or relocate the receiving device.
  - Increase the separation between the devices.
  - Connect the device to an outlet on a circuit different from that to which the other device(s) are connected.
  - Consult the manufacturer or field service technician for help.

- **The International Electrotechnical Commission sets the essential requirements for electrical and electronic equipment that may disturb, or be disturbed by, other equipment. The NT-510 complies with these requirements as shown in the tables in "6 EMC (ELECTROMAGNETIC COMPATIBILITY) (page 81)". Follow the guidance in the tables for use of the device in an electromagnetic environment.**

During Use

⚠ **WARNING**

- **Before starting measurement, set the safety stopper for each patient to prevent the air nozzle from touching the patient's eye.**
  Contact between the air nozzle and the eye may damage the cornea.

⚠ **CAUTION**

- **Before use, perform visual and operation checks. If abnormal conditions are encountered, stop using the device.**
  If the device is used under abnormal conditions, intended results may not occur. Also unexpected malfunctions or health hazards may occur due to improper measurement.
- **Refrain from use on patients who have corneal surface disorder or anamnesis.**
- **Take extra care when measuring patients with poor fixation.**
- **Before measurement, explain the measurement purpose or method sufficiently to patients.**
  ex) You will feel a puff of air on your eye. This is normal measurement and has no affect on the eye.
- **Be sure not to touch the patient's face during alignment or when switching the right and left of the patient's eye.**
- **Be sure to connect an interface cable, checking the symbol of output (OUT: ⊖▸).**
  Data transmission may not be performed properly.
- **Do not put hands or fingers near or under the moving parts (measuring unit, main body, and chinrest). Pay particular attention to the measuring unit as it moves in each direction during auto tracking. Be sure to give this caution to patients.**
  Hands or fingers may be pinched and may result in injury.
- **Instruct the patient to fix on the fixation light with their eyes wide open. Start the measurement after confirming that the instruction is properly followed by the patient. Be careful not to perform the measurement while the device is misaligned to the patient's eye.**
  Proper measurement may not be performed.
  ex) - Instruct the patient not to blink their eyes during the measurement. (The patient's blinking during the measurement can be prevented by having them blink just before the measurement then open their eyes wide.)
  - Instruct the patient to open both eyes during the measurement. (With one eye closed, the fixation is not stable and the other eye cannot be opened wide enough.)
- **After measurement, instruct the patient not to hold the chinrest when the patient is released from the device.**
  The device may topple over resulting in injury.
- **Before or after use of the device, and before treating each patient, wipe the forehead rest and chin rest with a clean cloth such as gauze dampened with rubbing alcohol.**
  If chinrest paper is used, remove one piece for each patient.
  For severe stains, wipe the area not with a dry cloth but with gauze dampened with alcohol.
- **After use on the patients with an infection, be sure to clean the air nozzle with a cotton swab dampened with rubbing alcohol.**
  Infected tears may be scattered and come into contact with the air nozzle then scattered again, causing a secondary infection.

⚠ **CAUTION**

- **Before and after use, check that there are no contaminations like dust on the air nozzle.**
  The measurement accuracy may decrease substantially.

- **In the event of smoke or strange odors, immediately turn off the device and disconnect the power plug from the outlet. After you are sure that the smoke has stopped, then contact NIDEK or your authorized distributor.**
  Usage of the device under such abnormal conditions may cause fire or electric shock. In case of fire, use a dry chemical (ABC) extinguisher to extinguish the fire.

- **Immediately replace the power cord if the internal wires are exposed, the device turns on or off when the power cord is moved, or the cord and/or plug are too hot to be held with hands.**
  This may result in electric shock or fire.
  In the event of malfunction, disconnect the power cord from the wall outlet. Never touch the inside of the device and contact NIDEK or your authorized distributor.

- **Never press the LCD display with a hard object such as a ball-point pen. Keep magnetic objects away from the LCD display.**
  The device may be damaged.

- **Do not operate the LCD display with wet hands.**
  Water seeping into the device may result in failure of the device.

- **There may be a few constantly-lit, missing, or dead pixels in your LCD which are a characteristic of the LCD. This does not represent failure of the LCD; continuously use the display.**

- **When connecting the device to the PC* that is not corresponded to IEC60601-1, be sure to supply power through the isolation transformer.**
  *** Except for the PC that adopts the class II AC adapter certificated with IEC60950-1.**
  Electric shock may occur. For installation of the isolation transformer, consult NIDEK or your authorized distributor.

- **When connecting to peripheral equipment like a PC with LAN connector via a medical facility network, insert or connect the isolation transformer between medical electrical equipment and networked device (HUB etc.), or networked device and other electrical equipment.**
  Depending on the types or numbers of other electrical equipment connected to the network, electric shock or malfunction/failure of the electrical equipment may occur.
  For installation of the network isolation transformer, consult NIDEK or your authorized distributor.

- **Accessory equipment connected to the analog and digital interfaces must be certified according to the representative appropriate national standards (for example, UL 60950-1 for Data Processing Equipment, UL 60601-1 for Medical Equipment, and CSA C22.2 No. 601-1, EN 60601-1 and IEC 60601-1). Furthermore, all configurations shall comply with the system standard IEC 60601-1. Anyone who connects additional equipment to the signal input part or signal output part configures a medical system, and is therefore responsible that the system complies with the requirements of the system standard IEC 60601-1. If in doubt, consult the technical service department of your local representative.**

⚠ **CAUTION**

- **When connecting interface devices to the device, confirm the symbols, then connect them securely without applying unnecessary great force.**
  Terminals or cables may become damaged.

- **Be sure to use only the printer paper (80620-00001) specified by NIDEK.**
  Without the printer paper, proper printing may not be achieved.

- **During installation and operation of the device, observe the following instructions about EMC (electromagnetic compatibility):**
  - Do not use the device simultaneously with other electronic equipment to avoid electromagnetic interference with the operation of the device.
  - Do not use the device near, on, or under other electronic equipment to avoid electromagnetic interference with the operation of the device.
  - Do not use the device in the same room with other equipment such as life-support equipment, other equipment that has major effects on the life of the patient and results of treatment, or other measurement or treatment equipment that involves small electric current.
  - Do not use the device with portable and mobile radio frequency communication systems because that may have an adverse effect on operation of the device.
  - Do not use cables and accessories that are not specified for the device because that may increase the emission of electromagnetic waves from the device and decrease the immunity of the device to electromagnetic disturbance.

- **If the device is used after a long period of disuse, check for any abnormality before use.**

- **If the device fails, disconnect the power cord from the power outlet, then contact NIDEK or your authorized distributor without touching the interior of the device.**

- **This device is classified as Group 1 set by ISO 15004-2: 2007 Light Hazard and conforms to the standard.**

○ Patient environment

The patient environment is the volume of space in which contact can occur between the patient and any part of the device (including connected devices) or between the patient and any other person(s) touching the device (including connected devices).

Use devices that comply with IEC60601-1 in the patient environment. If any device that does not comply with IEC 60601-1 is to be used, use an isolating transformer or common protective grounding.

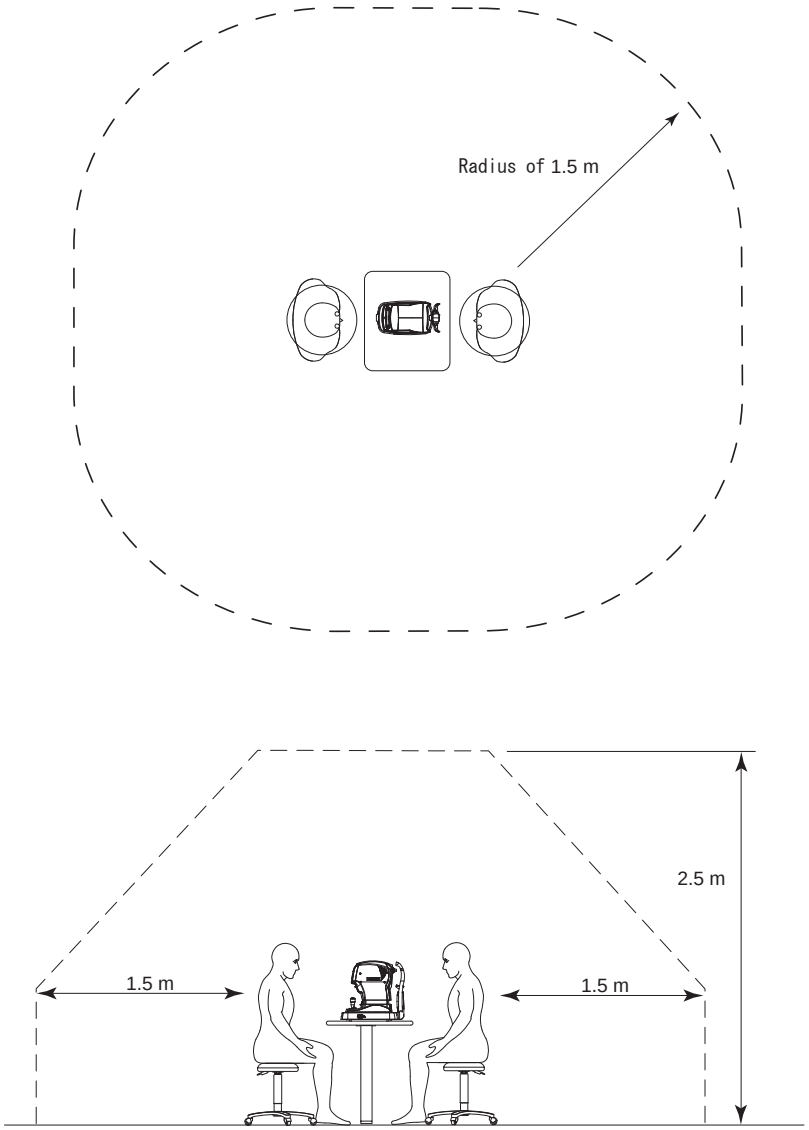

After Use

⚠ **CAUTION**

- **This device uses a heat-sensitive printer paper. The paper degrades over time and the printed characters may become illegible.**
  If glue containing organic solvents or adhesives such as on adhesive tape comes in contact with the printer paper, the printed characters may become illegible.
  To keep the printed data for a long period of time, make copies of the printouts or write the measured results down.

- **When the device is not in use, turn off the power switch and put the dust cover over the device.**
  If not, dust may affect the measurement accuracy.

- **Do not yank the power cord to disconnect it from a wall outlet but hold the plug.**
  This can damage the metal core of the cord and may result in fire, short circuit or electric shock.

- **Occasionally clean the prongs of the main plug with a dry cloth.**
  If dust settles between the prongs, the dust will collect moisture, and short circuit or fire may occur.

- **If the device will not be used for a long time, disconnect the power cord from the wall outlet.**
  Fire may occur.

- **During transportation or storage using dedicated packaging material, keep an environment that meets the following conditions.**
  Environmental conditions:
  Temperature: –10 to 55ºC (14 to 131ºF)
  Humidity: 10 to 95% (non-condensing)
  Pressure: 700 to 1060 hPa
  A place not exposed to the water
  No large amount of dust is contained in the air
  Vibration- and shock-free, level and stable surface without vibration and shock
  A place not exposed to direct sunlight
  No chemicals or organic solvents are present, or a place where corrosive gas may be generated

- **When transporting, set the mode to Packing mode and pack the main body in the original packing material with the fixing lever unlocked.**
  It may result in failure when excessive vibration and shock are applied.
  For packing mode setting, see “ ○Shutoff before transporting the device” (page 35)

Maintenance

⚠ **CAUTION**

- **Only NIDEK service representatives or hospital personnel trained by NIDEK should attempt to modify or touch the inside of the device and/or upgrade the software.**
  NIDEK is not responsible for any accidents resulted from improper servicing.
- **When performing maintenance work, secure sufficient maintenance space.**
  Maintenance work in an insufficient space may result in injury.
- **When the device is sent back to NIDEK for repair or maintenance, wipe the surfaces (especially, the area where patients contact) of the device with a clean cloth dampened with ethyl alcohol for disinfection.**
- **Do not use the device beyond its expected service life.**
  Even with proper maintenance, after time, the device reliability or safety may begin to fail to achieve the target values.
- **The manager of this device must perform maintenance every 6 months.**
  For details of the maintenance, contact NIDEK or your authorized distributor.
  When the maintenance cannot be performed by the user, entrust them to your authorized distributor.

Disposal

⚠ **CAUTION**

- **Follow local governing ordinances and recycling plans regarding disposal or recycling of device components. Especially when disposing of the lithium ion battery, circuit board, plastic parts that contain brominated flame retardant, LCD, or power cord, be sure to follow the local governing ordinances.**
  Follow the local governing ordinances and recycling plans when disposing of the circuit board with the lithium battery. Inappropriate disposal may contaminate the environment.
- **When disposing of packing materials, sort them by material and follow local governing ordinances and recycling plans.**
  Inappropriate disposal may contaminate the environment.

Table of Contents

1. BEFORE USE. 1

1.1 Outline of Device 1
1.2 Intended Use 1
1.3 Principles 2
1.4 Device Description 3
1.5 Measurement Screen Description 8
1.6 Labels and Indications on Device 11
1.7 Checking Contents 14
1.8 Before First Use 15

2. OPERATING PROCEDURE 19

2.1 Operation Flow 19
2.2 Outline of Measurement 20
2.2.1 Preparation for Measurement 20
2.2.2 Measurement 26
2.3 Completion of Measurements 35
2.4 Other Modes 37
2.4.1 Sleep mode 37
2.4.2 Eyelid detection mode 38
2.5 Printing 39
2.5.1 Printing measured data 39
2.5.2 Printing parameter settings 40
2.6 Parameter Settings 41
2.6.1 Parameter tables 44
2.6.2 Setting Network function 50
2.6.3 Setting date and time 55
2.6.4 Entering comments 57

3. OPERATION WHEN PERIPHERAL DEVICES ARE CONNECTED 59

3.1 Connecting to Computer 59
3.1.1 Outline 59
3.1.2 RS-232C connection 60
3.1.3 Network connection (LAN) 61
3.2 Connecting Barcode / Magnetic Card Reader 62
3.2.1 Outline 62
3.2.2 Connecting procedure 62

3.2.3 Operating procedure of barcode / magnetic card reader 62

4. MAINTENANCE 63

4.1 Troubleshooting. 63
4.2 Error Messages and Countermeasures 65
4.3 Replacing Printer Paper 68
4.4 Fixing Chinrest Paper 70
4.5 Cleaning. 71
4.5.1 Cleaning air nozzle. 71
4.5.2 Cleaning printer 72
4.5.3 Cleaning forehead rest and chinrest. 72
4.6 List of Replacement Parts 73

5. SPECIFICATIONS AND ACCESSORIES 75

5.1 Classifications 75
5.2 Safety Features 76
5.3 Specifications 77
5.4 Standard Configuration 79
5.4.1 Standard accessories. 79
5.4.2 Optional accessories 79

6. EMC (ELECTROMAGNETIC COMPATIBILITY) 81

7. GLOSSARY 85

8. INDEX 87

1. BEFORE USE

1.1 Outline of Device

The NON CONTACT TONOMETER Model NT-510 is designed for non-contact tonometry measurement.
The non-contact tonometry function measures the intraocular pressure without contacting the eye.
Tonometry is performed for screening of glaucoma, and for preoperative examination and postoperative care in ophthalmology.

This device is an integral type with a main body mounted on a base.
A chinrest is mounted on the base on the patient's side.
An LCD panel, control buttons, joystick and a printer are attached on the main body to conduct alignment and perform operations.
In addition to the above, the device also offers the following features:

- An auto-tracking mechanism is provided. The device automatically controls the up-and-down movements for alignment and focusing.
- An auto shot function is provided. Measurements take place automatically when the device is best aligned and in focus.
- An APC function that measures the intraocular pressure with the minimum necessary pressure of puffed air.
- A motorized up-and-down chinrest allows the operator to adjust the height of the chinrest.
- A built-in RS-232C and LAN interface allows data export to computers etc.

1.2 Intended Use

The NON CONTACT TONOMETER NT-510 is intended to be used for the measurement of intraocular pressure.

1.3 Principles

Based on the Imbert-Fick principle (W = Pt × A), the intraocular pressure is calculated by dividing the amount of air pressure into the area of applanated surface.

The device increases the air pressure puffed onto the cornea in proportion to time. The shape of the cornea changes gradually in the order of convex surface → applanated surface → concave surface. This change is optically detected and the device calculates the time required to make the pressed area flat after air is puffed on it. The air pressure used to make the cornea flat is calculated by time, and finally the intraocular pressure is obtained.

APC (Automatic Puff Control) function

The intraocular pressure measurement is performed with the air pressure as low as possible. When the measurement range is set to “APC 40” or “APC 60”, in the first measurement, the automatic shutoff function, which stops puffing air as soon as the light reflected from the cornea is detected, activates in order to eliminate excessive puffing.

In subsequent measurements, the APC function activates to perform the measurement with the minimum air pressure based on the former measurement data.

As the patient's eye is protected from excessive air pressure, discomfort of the patient can be decreased and continuous measurement can be performed smoothly.

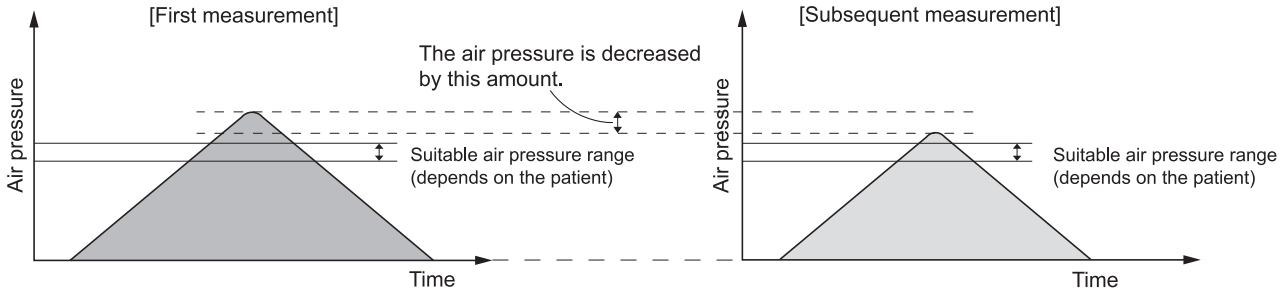

<Automatic shut-off function> <APC function>

1.4 Device Description

○ Front view

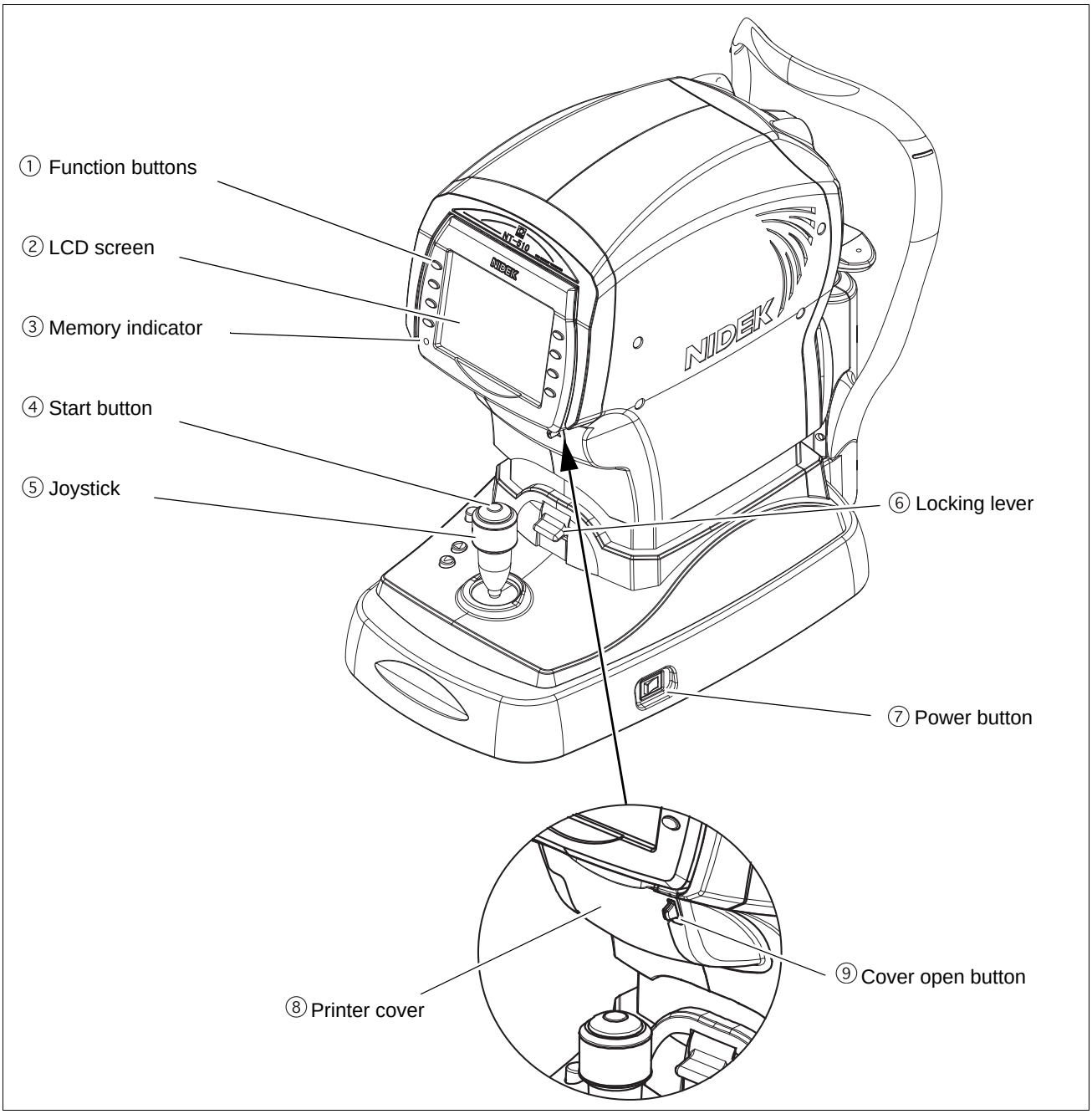

①**Function buttons**

Used to set the device and to switch the screen.

Functions assigned to the function buttons are displayed by icon next to each switch on the screen.
Lower two buttons on the left of the screen have unique functions when the measurement screen is displayed.

•CLR button ( )

Used to clear the measured data.

When the CLR button is pressed for about a second, all the measured data is erased.

•Print button ( )

When this button is pressed while the memory indicator is lit, measured results are printed out.

If this button is pressed when the memory indicator is turned off, the printer paper is fed.

②LCD screen

5.7-inch color LCD screen. The LCD screen panel pops out when the lower portion of the panel is pulled toward the operator.

When operating the device in an upright position, tilt the panel so that the indications on the screen are clear.

The panel is reset to its original position by magnet.

③Memory indicator

Indicates that measured data is being stored in memory.

ON	Measured data is stored in the internal memory.
OFF	Measured data is not stored in the internal memory.
Blinking	Sleep mode

④Start button

When the start button is pressed, the measurement takes place regardless of the alignment and focusing status of the device.

⑤Joystick

Used for alignment and focusing.

Tilt the joystick to the right and left for alignment. Turn the joystick for alignment in the up and down directions. For focusing, push the joystick forward and pull it backward.

⑥Locking lever

Used to fix the main body to the base unit.

To lock the main body, press the locking lever down.

⑦Power button

Used to turn on or off the power to the device.

⑧Printer cover

Inside is the printer equipped with the auto cutter located. Open the printer cover for replacing printer paper by pressing the cover open button.

⑨Cover open button

To open the printer cover, press the button.

○ Rear view

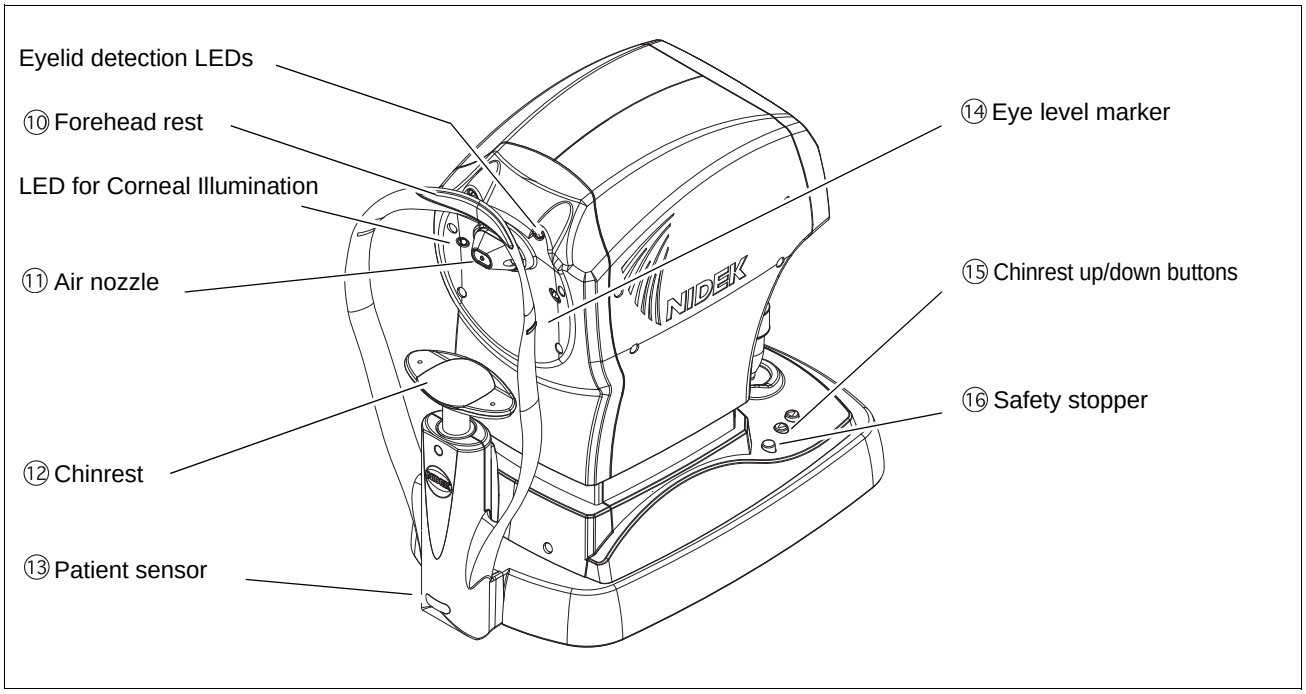

⑩ Forehead rest

During measurements, the patient's forehead should be gently placed over the forehead rest.

Clean the forehead rest for each patient. (See " During Use" (page V) and "4.5.3 Cleaning forehead rest and chinrest" (page 72)).

⑪ Air nozzle

Air is puffed out of the nozzle of the measuring unit.

In this operator's manual, the area containing the observation window around the air nozzle is referred to as the air nozzle.

⑫ Chinrest

During measurements, the patient's chin should be gently placed on the chinrest. Adjust the chinrest with the eye level marker as a guide to position the patient's eye to the proper height for measurement.

Clean the chinrest for each patient. (See " During Use" (page V) and "4.5.3 Cleaning forehead rest and chinrest" (page 72)).

⑬ Patient sensor

The patient sensor detects whether the patient is seated in front of the device.

The sensor, while detecting the patient, assumes that the patient's chin is placed on the chinrest and the puffed air pressure check is not performed.

⑭ Eye level marker

Used as a guide for the patient's eye level during measurements.

The height of the chinrest should be adjusted so that the center level of the patient's eye almost aligns with this line.

⑮ Chinrest up/down buttons (▲ , ▼)

Move up or down the chinrest.

⑯ Safety stopper

Used to provide a safety space so that the air nozzle does not touch the patient's eye.

Change the position of the stopper for each patient to keep the proper amount of the space for safety.
While pressing the safety stopper, "RTN TO ORG" blinks on the screen, and the measuring unit automatically returns to the origin in the right, left, back and forth directions.
(See " During Use" (page V) and Step 8 of "2.2.1 Preparation for Measurement" (page 20).)

Note

- Materials composed of the parts that contact the patient during measurement are as follows:
  - Function buttons: ABS resin
  - Start button: ABS resin
  - Joystick: ABS resin, Synthetic rubber
  - Power switch: Polyamide resin
  - Forehead rest: Elastomer
  - Chinrest: ABS resin
  - Chinrest up/down buttons: ABS resin
  - Safety stopper: ABS resin

○ Bottom view

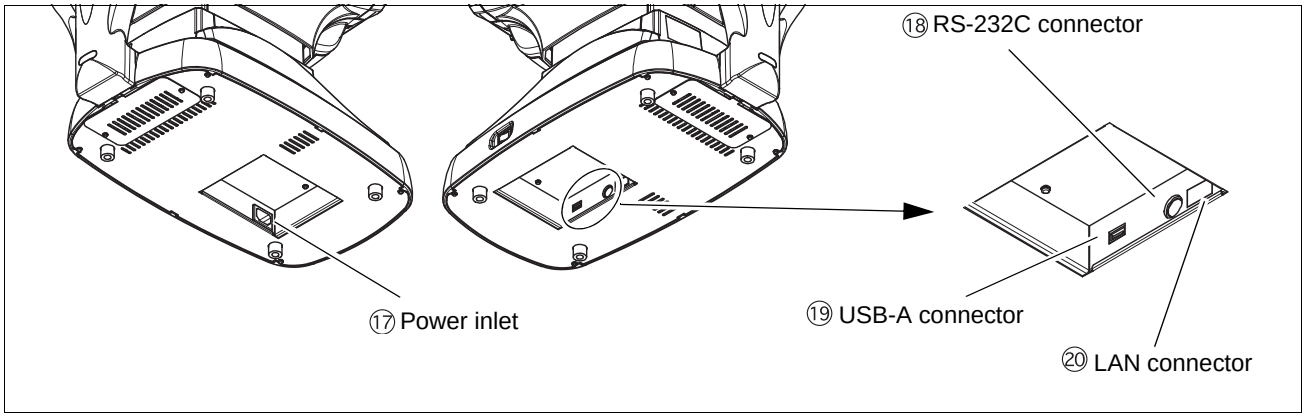

⑰ Power inlet

Used to connect the detachable power cord.

⑱ RS-232C connector

When exporting the measured data to an external computer with RS-232C connector, connect an interface cable here.

(OUT)	To export the measured data to an external computer, connect an interface cable to this side.

Be sure to turn off power to each device before connecting the cables. (See “ Before Use” (page II), “ During Use” (page V), and “3 OPERATION WHEN PERIPHERAL DEVICES ARE CONNECTED” (page 59).)

⑲ USB-A connector

The following are possible with USB connection.

- Barcode or magnetic card reader can be connected to read the patient's ID to the NT-510.
- USB flash drive can be connected to upgrade the software of the NT-510.

  NIDEK service personnel upgrade the software.
  When connecting a cable, be sure to turn off the power of each devices. (See “ Before Use” (page II),“ During Use” (page V), and “3 OPERATION WHEN PERIPHERAL DEVICES ARE CONNECTED” (page 59).)

⑳ LAN connector

The measured data can be exported to an external computer with LAN connection.

NIDEK service personnel sets the LAN connection with permission from the network administrator of the facility.
When connecting a cable, be sure to turn off the power of each devices. (See “ Before Use” (page II), “ During Use” (page V), and “3 OPERATION WHEN PERIPHERAL DEVICES ARE CONNECTED” (page 59).)

1.5 Measurement Screen Description

The screen has Page 1 and Page 2.

<When Page 1 is displayed>

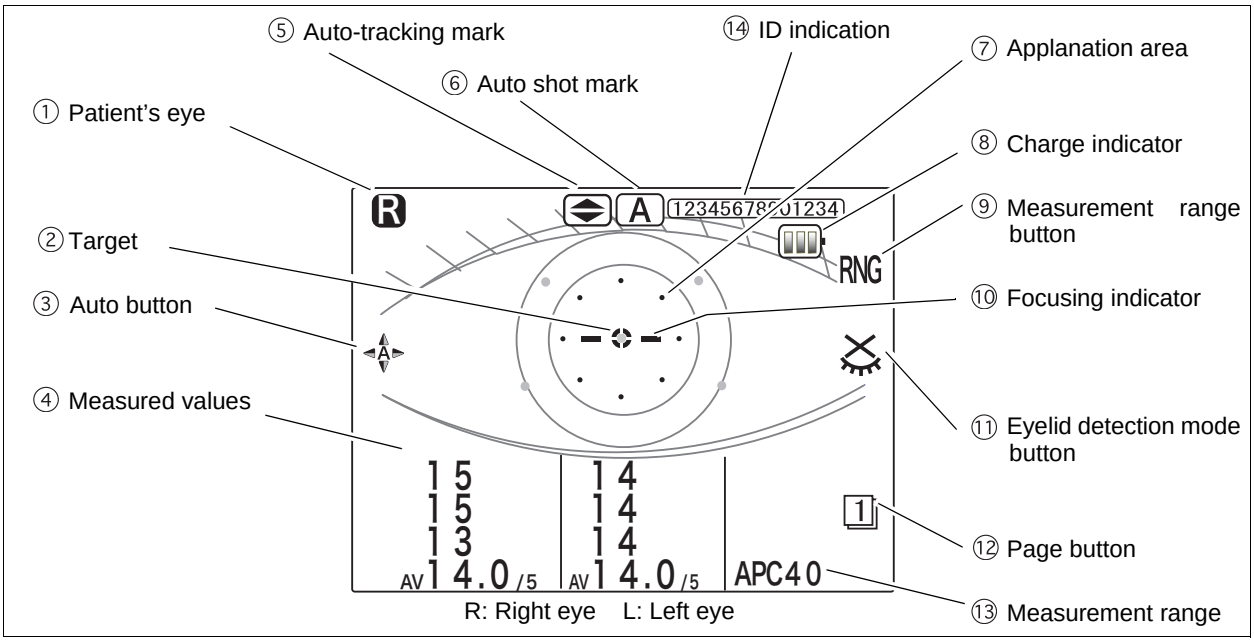

①**Patient's eye**

Indicates the right or left eye of the patient.

②**Target (✪)**

Used as a guide to position the patient's eye in the center of the screen during the NT measurement.

③**Auto button (◄A►)**

Selects the auto-tracking function and auto shot function.

Select auto-tracking from ⬍ or OFF. Select auto shot from A or OFF.

④**Measured values**

Three pieces of measured data are shown. The latest measured data is shown at the top and the older data is shown under the latest data.

The data in the bottom line preceded by "AV" is the average data.
"/ number" appended to the average data represents the number of items of measured data used for averaging.
When the setting for number of measurements is 1 or 2, the measured data is displayed for the set number.

⑤**Auto-tracking mark**

This mark indicates that the auto-tracking (alignment in the up-and-down direction) is turned on.

The NT-510 displays ⬍ or Manual (No indication).

⬍	Auto-tracking in the up-and-down directions is turned on.
(No indication)	Manually align the device and bring the eye into focus.

⑥ Auto shot mark

Indicates the setting of the auto shot function.

A	When the optimum alignment and focus are obtained, the measurement automatically begins. This mark appears when the parameter "23. ASHOT TIMING" is "NORMAL".
AF	When the optimum alignment and focus are obtained, the measurement automatically begins. This mark appears when the parameter "23. ASHOT TIMING" is "FAST".
(No indication)	Press the start button to start measurement.

Note

- See “2.6 Parameter Settings” (page 41) for the setting of the parameter “23. ASHOT TIMING".

⑦ Applanation area ( )

Represents the range in which air is puffed to the cornea.

⑧ Charge indicator

Indicates that the device is in standby mode for puffing air. While it is indicated, air cannot be puffed.

⑨ Range button (RNG)

Used to select the measurement range.

Each time the button is pressed, the measurement range switches in the following order: “APC 40” → “APC 60” → “40” → “60” → “APC 40” → ….
The selected measurement range is displayed in the lower right of the screen.
When the power button is turned on, “APC 40” is displayed by default.
For the contents of measurement range, see Step 5 (page21) of "2.2.1 Preparation for Measurement”.

⑩ Focusing indicator

Shows the distance between the patient’s eye and the air nozzle.

Manipulate the joystick until optimal focus ( ) is attained.

⑪ Eyelid detection mode button ( )

Used to activate the detection (eyelid detection) mode which detects whether the eyelid is over the applanation area or not.

Each time the button is pressed, the eyelid detection mode is turned on or off.
Whether the eyelid detection mode is turned on or off is checked by the eyelid detection cancel marker in the lower right of the screen.

Indication	The eyelid detection mode is cancelled.
No indication	The eyelid detection mode is activated.

For details, see “2.4.2 Eyelid detection mode” (page 38).

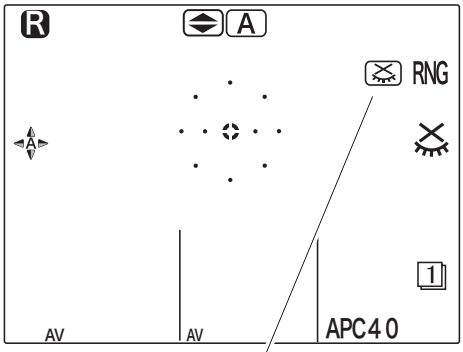

Eyelid detection mode marker

⑫ Page button (1 , 2)

Switches the measurement screen between Page 1 and Page 2.

Pressing the button switches the page in the following order: Page 1→ Page 2→ Page 1→ .....
The displayed icons vary according to the selected page.

⑬ Measurement range

The selected measurement range is displayed.

The measurement range selected from “APC40”, “APC60”, “40” or “60” is displayed.

⑭ ID indication

Displays the patient's ID read from the barcode or magnetic card reader.

<When Page 2 is displayed>

⑮ Parameter button ( )

Switches the screen to the PARAMETER SETTING screen.
Pressing the button for about a second switches the screen to the PARAMETER SETTING screen.

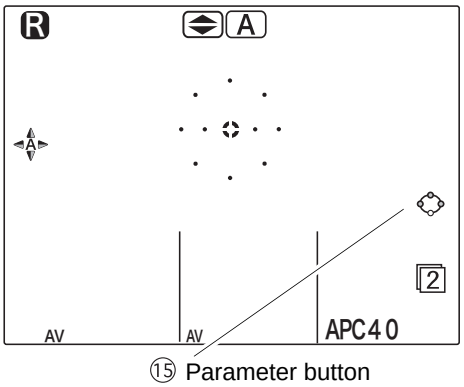

1.6 Labels and Indications on Device

To call the operator's attention, the device is provided with labels and indications.
If labels are curling up or characters are faded and become barely legible, contact NIDEK or your authorized distributor.

	Indicates that the degree of protection against electric shock is of a Type B Applied Part. *The applied parts are the forehead rest and chinrest (see ⑩ and ⑫ in "1.4 Device Description" (page 3))
	Indicates that when the switch is pressed to this symbol side, power is not supplied to the device.
	Indicates that when the switch is pressed to this symbol side, power is supplied to the device.
	Indicates that the device must be supplied only with alternating current.
	Indicates the output port.
	Indicates the date of manufacture.
	Indicates the manufacturer.
	Indicates that this product shall be disposed of in a separate collection of electrical and electronic equipment in EU.

For countries other than the U.S.A. and Canada

	Indicates that the operator must refer to the related instructions in the operator's manual prior to operation.

For the U.S.A. and Canada

	Indicates that caution must be taken. Refer to the operator's manual before use.

○ For countries other than the U.S.A. and Canada

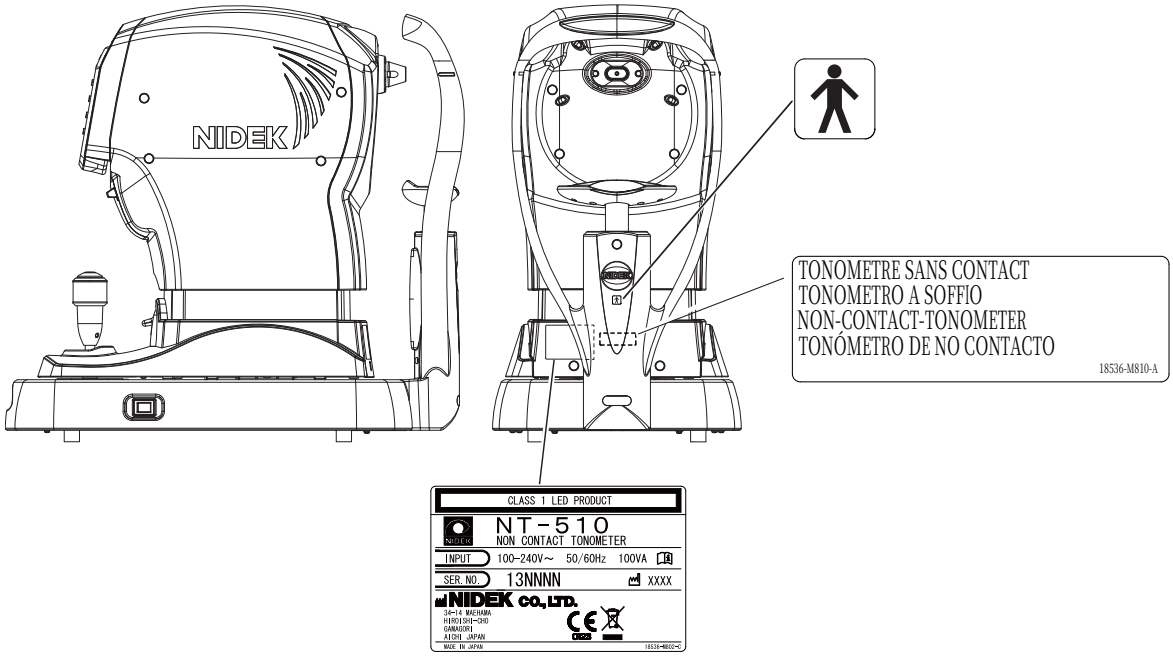

See “Before Use” (page II) and “1.8 Before First Use” (page 15).

[Underside view]

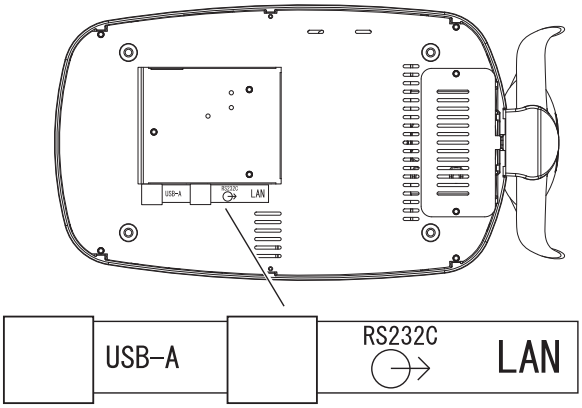

See “Before Use” (page II), “During Use” (page V), and “3 OPERATION WHEN PERIPHERAL DEVICES ARE CONNECTED” (page 59).

CE 0123	CE marking Indicates that the product conforms fully to the requirements of the Medical Device Directive (93/42/EEC). The NT-510 is classified as a Class IIa according to the Medical Device Directive.

○ For the U.S.A. and Canada

See “Before Use” (page II) and
“1.8 Before First Use” (page 15).

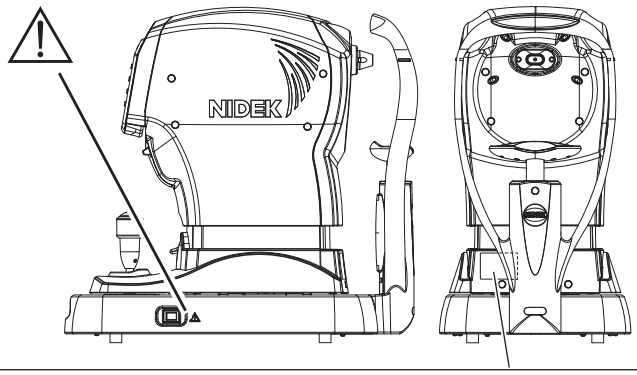

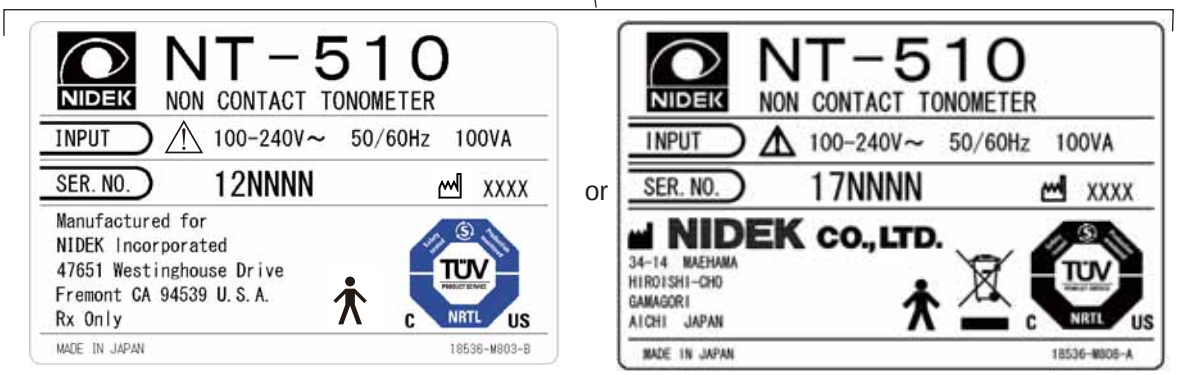

For the USA

For Canada

See “Before Use” (page II)

[Underside view]

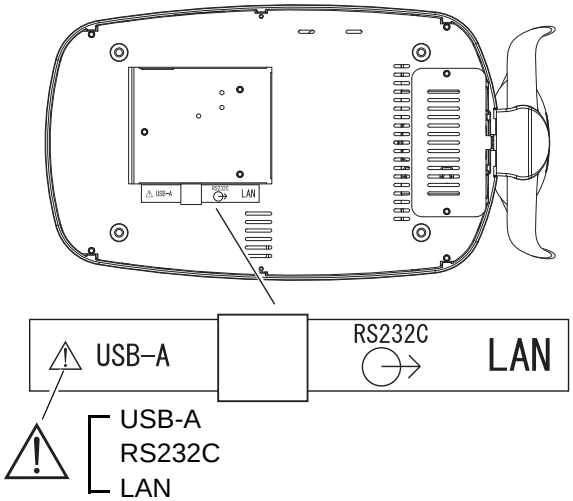

See “Before Use” (page II), “During Use” (page V), and “3 OPERATION WHEN PERIPHERAL DEVICES ARE CONNECTED” (page 59).

C NRTL US	Indicates that the product is certified for the both the U.S.A. and the Canadian market, to the applicable U.S.A. and Canadian standards.

1.7 Checking Contents

Unpack the contents from the shipping carton and check them.

The following are included in the standard configuration.

- Main body
- Printer paper (3 rolls)
- Power cable
- Pack of chinrest paper
- Fixing pins for chinrest paper (2 units)
- Dust cover
- Operator’s manual (this book)

1.8 Before First Use

Place the device on a stable table and connect a power cord to it.

Note

- Be sure not to install the device in a location exposed to the direct sunlight or a place directly under bright lights.

  If an intense light enters the observation window of the air nozzle, measurement may not be properly performed.

1 Place the main body on a stable table.

2 Pull the main body fully to the side on which the device is laid down, lock the main body to the base unit with the locking lever and lay the device down gently

3 Connect the power cord to the power inlet.

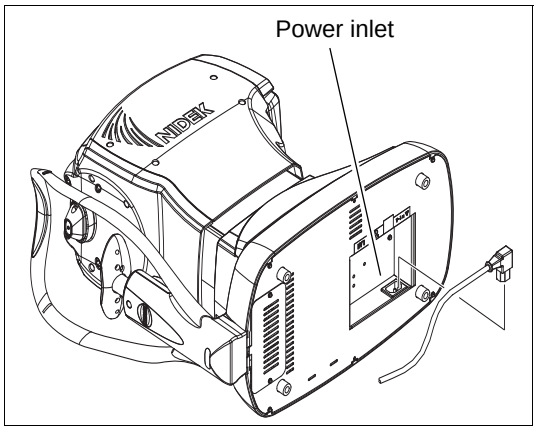

4 Connect peripheral devices if necessary.

For details of the peripheral devices connection, see “3 OPERATION WHEN PERIPHERAL DEVICES ARE CONNECTED” (page 59).

5 Stand up the device upright.

6 Make sure that the power switch is turned off (○) and plug the power cord in the wall outlet.

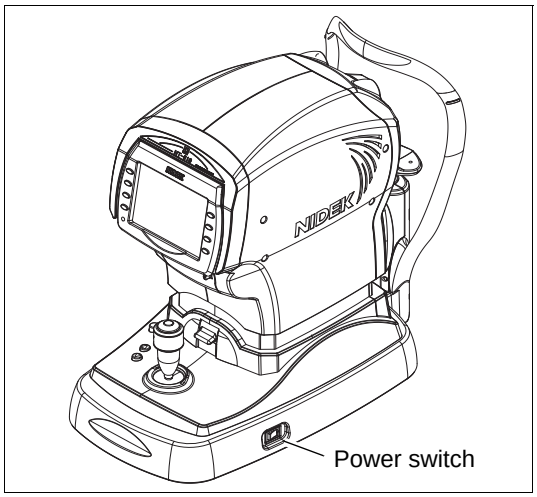

⚠ **WARNING** • **Connect the power plug to a ground outlet. Or connect a grounding wire to a ground terminal.**

Electric shock or fire may occur in the event of device malfunction or power leakage.

7 Turn the power switch on (I).

The initial screen is displayed on the LCD display and the device starts initializing.

Initial screen

8 Make sure that the measurement screen is displayed.

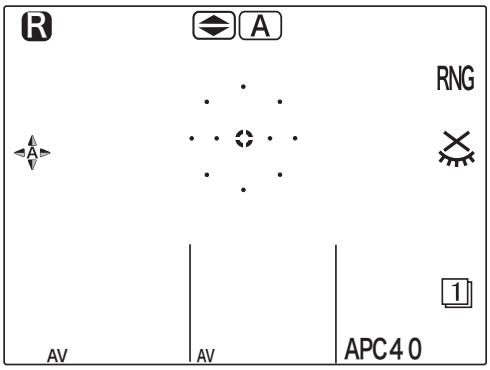

Measurement screen

Note

- When the device is used for the first time, “NO PAPER” appears indicating that no paper is loaded.

9 Set the printer paper.

See “4.3 Replacing Printer Paper” (page 68) for details on the setting method.

This is all you have to do before use.

Note

- Set the parameters to suit your needs or preferences.

  See “2.6 Parameter Settings” (page 41) for the parameters and their setting methods.
- See “3 OPERATION WHEN PERIPHERAL DEVICES ARE CONNECTED” (page 59) for the procedure to connect the peripheral devices.

○ Please see here when you want to do like this.

When	Refer to the following.
You need to know the details of the “PRESSURE CHECK MODE” message displayed at device start-up.	"○ Measuring puffed air pressure check during startup” (page 33)
Auto-tracking or auto shot does not work depending on eye to be measured.	Note of Step 3 (page 26) in “○2.2.2 Measurement” Note of Step 4 (page 29) in “○2.2.2 Measurement”
Changing contents to be printed	“2.5.1 Printing measured data” (page 39)
Setting date and time to be printed	“2.6.3 Setting date and time” (page 55)
Printing facility name	“2.6.4 Entering comments” (page 57)
Resetting all parameters to their defaults	"○ Resetting the parameters” (page 43)

○ Setting by parameter

Setting parameters allows various functions of the device. For details, see “2.6 Parameter Settings” (page 41).

Setting contents	Parameters
Handling method of low confidence data during measurement	01. SET LOW CONF to 03. LOW CONF ALARM
Whether or not the fixation LED blinks during measurement	04. FIX LED BLINK
Measurement count of measurement	05. NT CONTINUE
Whether measurement values are displayed in fixed-point representation	06. DECIMAL DIGIT
Measurement interval of measurement	07. MEAS INTERVAL
Operation method of printing	11. PRINT
Printing with narrow line-spacing	12. ECONO. PRINT
Whether or not to erase measured data in memory just after printing	13. PRINT&CLEAR
Density of printing text	14. PRINT DENCITY
Contents of printing	15. PATIENT NO.to 20. NT PRINT
Whether or not the puffed air pressure check is performed at device start-up	21. PRESSURE CHECK
Contents that change by pressing auto button	22. TRACKING SW
Auto Shot Timing	23. ASHOT TIMING
Time after which sleep mode is activated	24. SLEEP
Volume of beeping	25. BEEP
Brightness of LCD display	26. NT BRIGHTNESS
Whether or not to display icons on measurement screen	27. ICON OFF
Target type of measurement	28. TARGET TYPE

2. OPERATING PROCEDURE

2.1 Operation Flow

Turning on the device

“2.2.1 Preparation for Measurement” (page 20)

Turn on the device and configure it us as necessary.

Set up the patient.

Measurement

“2.2.2 Measurement” (page 26)

Printout

“2.5 Printing” (page 39)

* For transferring data to connected devices:

“3 OPERATION WHEN PERIPHERAL DEVICES ARE CONNECTED” (page 59)

Turning off the device

“2.3 Completion of Measurements” (page 35)

2.2 Outline of Measurement

This section describes the general operating procedure. The operating procedure differs according to the selected measurement mode.

2.2.1 Preparation for Measurement

1 Turn the power switch on (|).

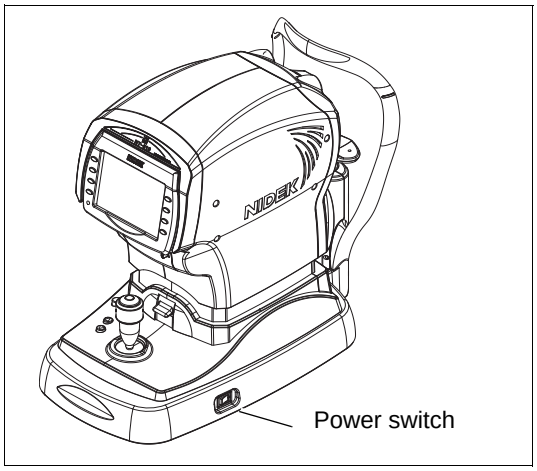

The title screen is displayed and the device is initialized.

Initial screen

Wait for a while until the screen switches to the measurement screen.

Note

- When the PRESSURE CHECK parameters are turned on, respective check screens are displayed before the measurement screen is displayed.

  For details, see “○ Measuring puffed air pressure check during startup (page 33)”.

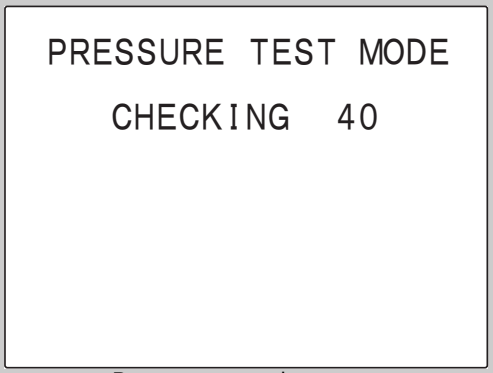

Pressure test mode screen

2 The measurement screen is displayed.

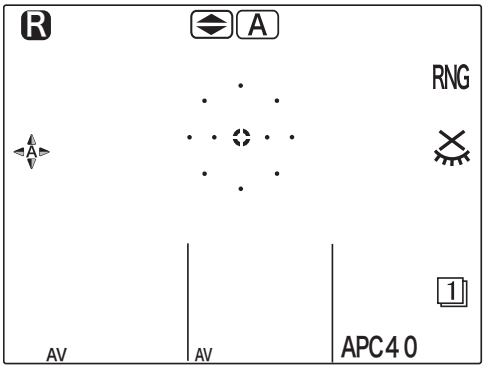

Measurement screen

Note

- “NO PAPER” is displayed on the screen if the power switch is turned on with no printer paper loaded.

  Load the printer paper.

3 Perform checks before use.

Perform the following checks before use.

No error message appears.

The main body moves smoothly using the joystick.

The chinrest moves up and down by pressing the chinrest up/down button.

Printer supply is adequate.

Follow “4.1 Troubleshooting” (page 63) if abnormal conditions are encountered.

4 Establish the measurement conditions.

The following conditions should be specified:

1 : Measurement mode: Auto-tracking, Auto shot, Target type

•Setting of the Auto-tracking and Auto shot

Specify the alignment (up-and-down) and the method of triggering measurements.

Specify the methods while holding down the auto button .

Auto-tracking	Auto shot	On-screen mark	Description
ON	ON		The auto-tracking in the up-and-down directions is turned on. The measurements take place automatically when the device is best aligned and focused on the eye.
ON	OFF		The auto-tracking in the up-and-down directions is turned on. Press the start button to start measurements.
OFF	ON	A	Manually align the device and bring the eye into focus. The measurements take place automatically when the device is best aligned and focused on the eye.
OFF	OFF	(No mark)	Manually align the device and bring the eye into focus. Press the start button to start measurements.

Note

- The functions assigned to the Auto button depend on the 22. TRACKING SW parameter settings.

  For the setting procedure, see “2.6 Parameter Settings” (page 41).

•Setting of the Target type

During measurement, the types of the target and focusing indicator are parameter (27. TARGET TYPE) -selectable from two options:

RKT	During measurement, the standard target and focusing indicator are displayed (Factory setting).
NT OLD	During measurement, the focusing indicator used for earlier NIDEK models is displayed.

The following description is illustrated with the screens displayed on condition that the 27. TARGET TYPE parameter is set to “RKT”.

2 : Measurement conditions set by parameters

Conditions for measurement can be set by parameters.

For details of settings, see “2.6 Parameter Settings” (page 41).

5 Press the RNG button RNG to select the measurement range.

Each time the button is pressed, the measurement range switches in the following order: “APC 40” → “APC 60” → “40” → “60” → “APC 40” → ….

Just after power-up, “APC 40” is set by default.

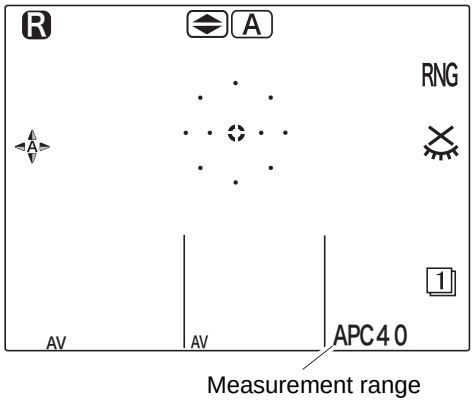

Measurement range	Guide for selection	Air pressure controls
APC 40	Normal	The peak of the air pressure is automatically controlled within the range of 1 to 40 mmHg.
APC 60	40 mmHg or more of intraocular pressure	The peak of the air pressure is automatically controlled within the range of 1 to 60 mmHg.
40	The intraocular pressure fluctuates substantially.	The peak of the air pressure is fixed within the range of 1 to 40 mmHg.
60	40 mmHg or more of intraocular pressure that fluctuates substantially.	The peak of the air pressure is fixed within the range of 1 to 60 mmHg.

6 If necessary, disable the eyelid detection mode.

Disable the mode by pressing the eyelid detection mode button .

For eyelid detection mode, see “2.4.2 Eyelid detection mode” (page 38).

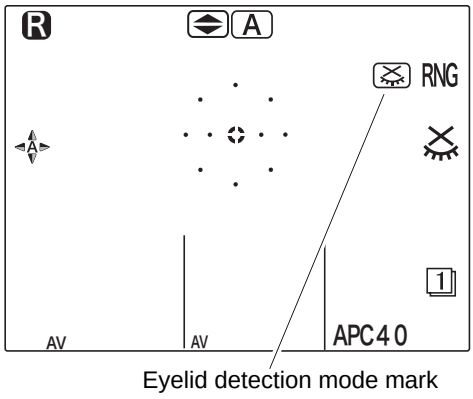

7 Prepare the patient.

1) Wipe the forehead rest and chinrest that contact the patient with clean absorbent cotton or gauze dampened with rubbing alcohol.

   If chinrest paper is used, remove one piece for each patient.

   See “ During Use” (page V) and “4.5.3 Cleaning forehead rest and chinrest” (page 72).

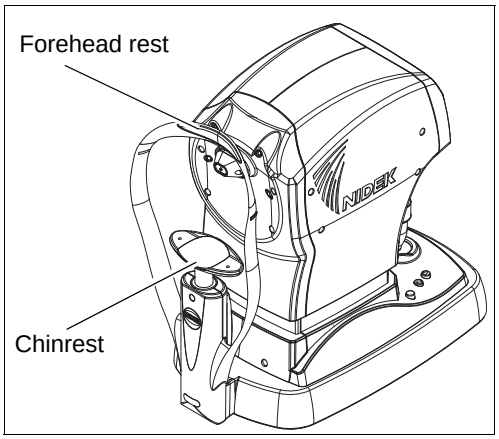

2) Instruct the patient to take off spectacles or contact lenses and sit on a chair.

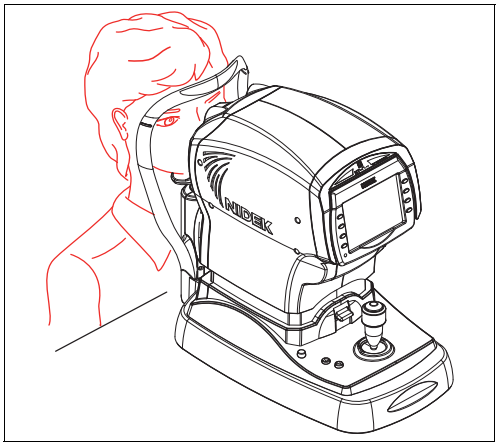

3) Have the patient place his/her chin on the chinrest as deeply as possible, and his/her forehead on the forehead rest lightly.

4) Adjust the height of the chinrest by the chinrest up/down button (▲, ▼) until the center level of the patient's eye aligns with the eye level marker.

   Before adjusting the height of the chinrest, inform the patient that the chinrest moves up and down.

   When moving the chinrest up or down, check the patient condition directly.

   If a large deviation with the eye level marker is found, release the chin from the chinrest and then move the chinrest up or down.

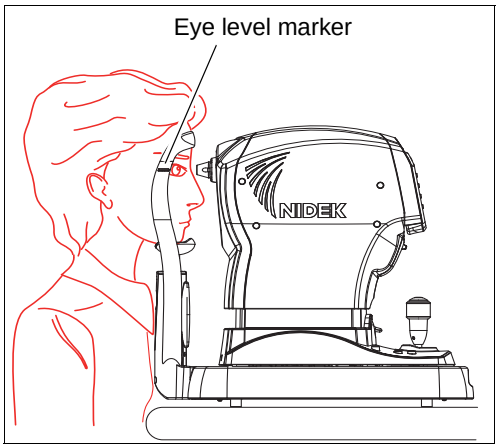

If the chinrest is at the upper (or lower) mechanical limit, the upper limit mark (or lower limit mark) is displayed on the screen.

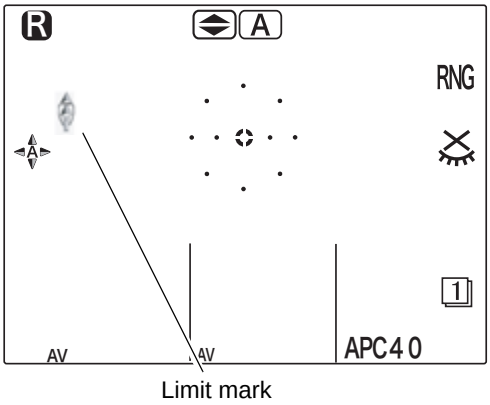

8 Set the safety space between the patient's eye and air nozzle with the safety stopper.

⚠ WARNING • Before the measurement, be sure to set the safety stopper.
The air nozzle may touch and scratch the cornea.

1) Pressing the safety stopper[*1],operate the joystick so that the air nozzle approaches the cornea slowly.

   While pressing the safety stopper, "RTN TO ORG" blinks on the screen.

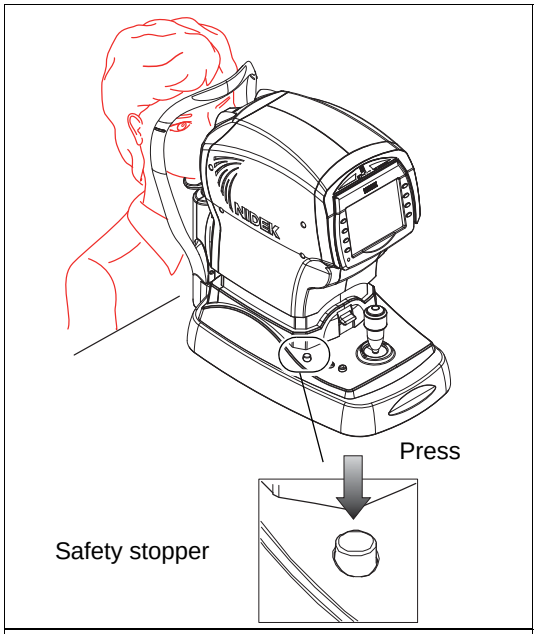

2) While watching from a side of the device, release the safety stopper when the space between the patient's eye and the air nozzle becomes 8 to 10 mm.

   The blinking "RTN TO ORG" on the screen disappears when the safety stopper locks the main body to the determined position.

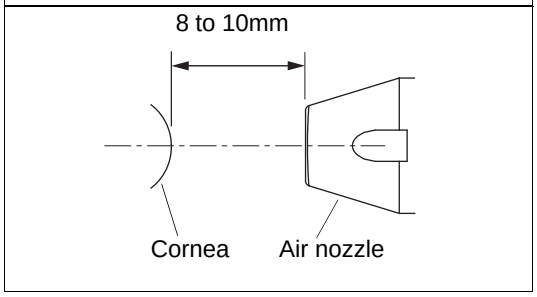

3) Slightly push the joystick backward and pull it backward to confirm that the main body does not move toward the patient from the position locked in Step 2).

9 Provide the patient with an explanation about the measurement.

To help the patient relax, provide the patient with such an explanation before starting the measurement as:

"You may be surprised by air puffed into your eye, but do not worry. Please be patient and relax for a moment until I can measure your intercalary pressure three times per eye."

***1. While the safety stopper is pushed down in NT measurement mode, the "RTN TO ORG" message is displayed on the screen and the auto-tracking and auto shot functions are disabled.**

2.2.2 Measurement

1 Manipulate the joystick to display the patient's eye on the screen.

By tilting the joystick to the right and left, the main body moves right, left, back and forth. By turning the upper part of the joystick, the measuring unit moves up and down.

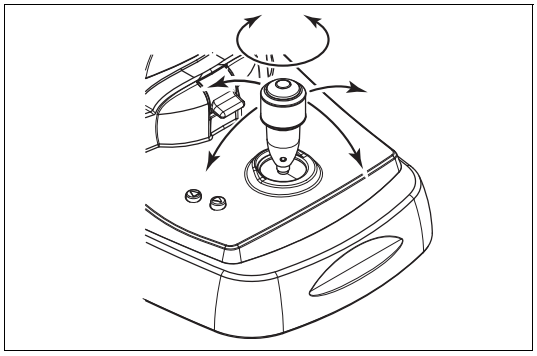

Align the eye position to the measuring point with right, left, up and down movements. Adjust the focus with back and forth movements.

2 Instruct the patient to look at the fixation light (green luminous spot) in the air nozzle.

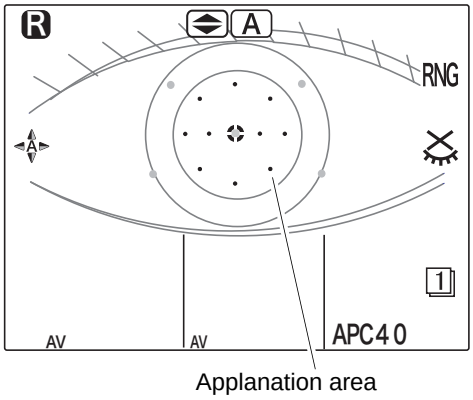

Note

- Ensure that the patient's eyelashes or eyelid are not in the applanation area and the patient's eye is not watery.

  These factors cause measurement errors or decrease the accuracy of measurements.

  If the patient's eyelashes or eyelid are within the applanation area, lift the patient's lid, paying attention not to press against the eyeball.

  If the eye is watery, have the patient blink his or her eyes or wipe tears.
- Select whether to illuminate or blink the fixation light by setting the 04. FIX LED BLINK parameter.

3 Perform alignment and focusing.

The methods of alignment and focusing vary according to the 22. TRACKING SW parameter setting

* For details of the setting, see "• Setting of the Auto-tracking and Auto shot" (page 22).

Align the alignment spot reflected over the patient's eye with the target (✥).

Perform focusing according to the indication of the focusing indicator displayed on the screen.

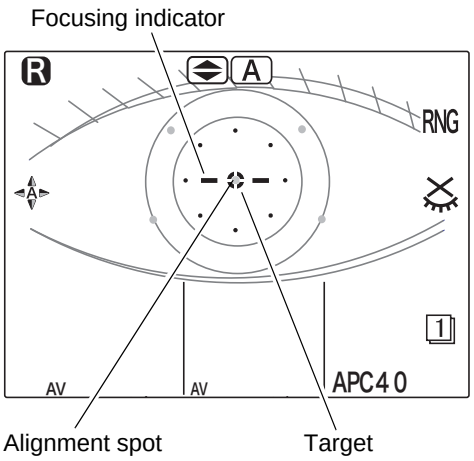

Note

- When the 27. TARGET TYPE parameter is set to “NT OLD”, the indications on the screen are as shown on the right.

  The indication of the applanation area and focusing indicator is different from the one displayed when the parameter is set to RKT.

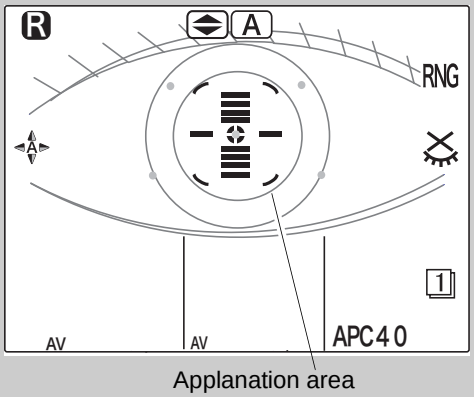

When the auto-tracking function is turned on:

1) Perform rough alignment and focusing by manipulating the joystick to move the alignment spot in the working range of auto-tracking.
2) When the alignment spot is placed within the working range of auto-tracking, the device automatically starts alignment.
3) As the focusing indicator is displayed, manipulate the joystick until the optimal focusing indicator is displayed.

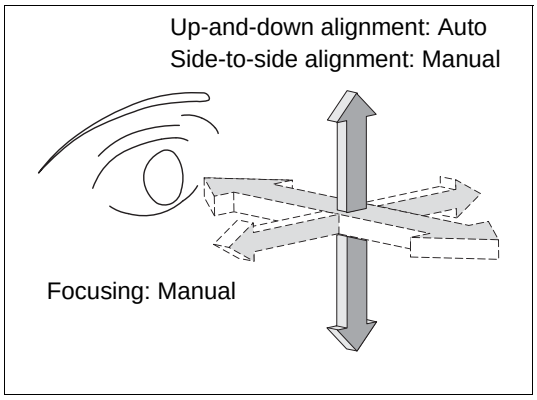

When the auto-tracking function is turned off:

1) Manipulate the joystick to move the alignment spot reflected by the patient’s eye within the alignment target.
2) As the focusing indicator is displayed, manipulate the joystick until the optimal focusing indicator is displayed.

   During the focusing, maintain alignment between the device and the patient’s eye.

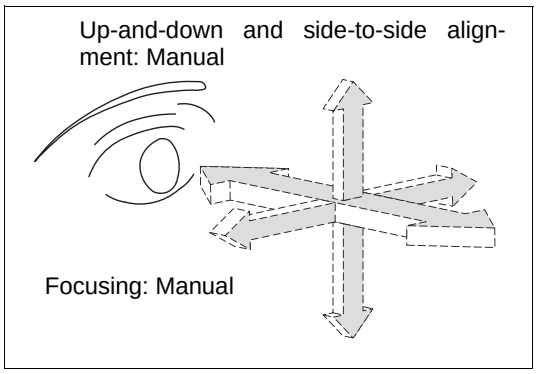

Note

- The device may not perform correct measurement when the eyelashes or eyelid is in the applanation area.

  In such cases, instruct the patient to open his or her eye wider.

  If the patient cannot open wider, lift the patient's lid, paying attention not to press against the eyeball.

If the main body gets out of the working range of auto-racking in the back-and-forth direction:

As the limit marks displayed, manipulate the joystick in the direction of the arrow.

<Examples of displayed limit marks>

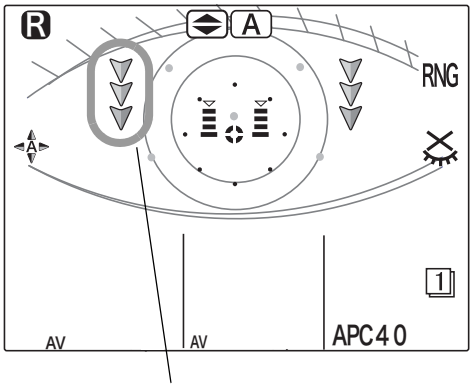

The patient eye is too high from the measuring unit. Move down the chinrest to lower the level of the eye.

▲▲▲	Move the chinrest up.
▼▼▼	Move the chinrest down.

Indication of the focusing indicator:

Push the joystick forward and pull it backward until the focusing indicator shows the optimal state.

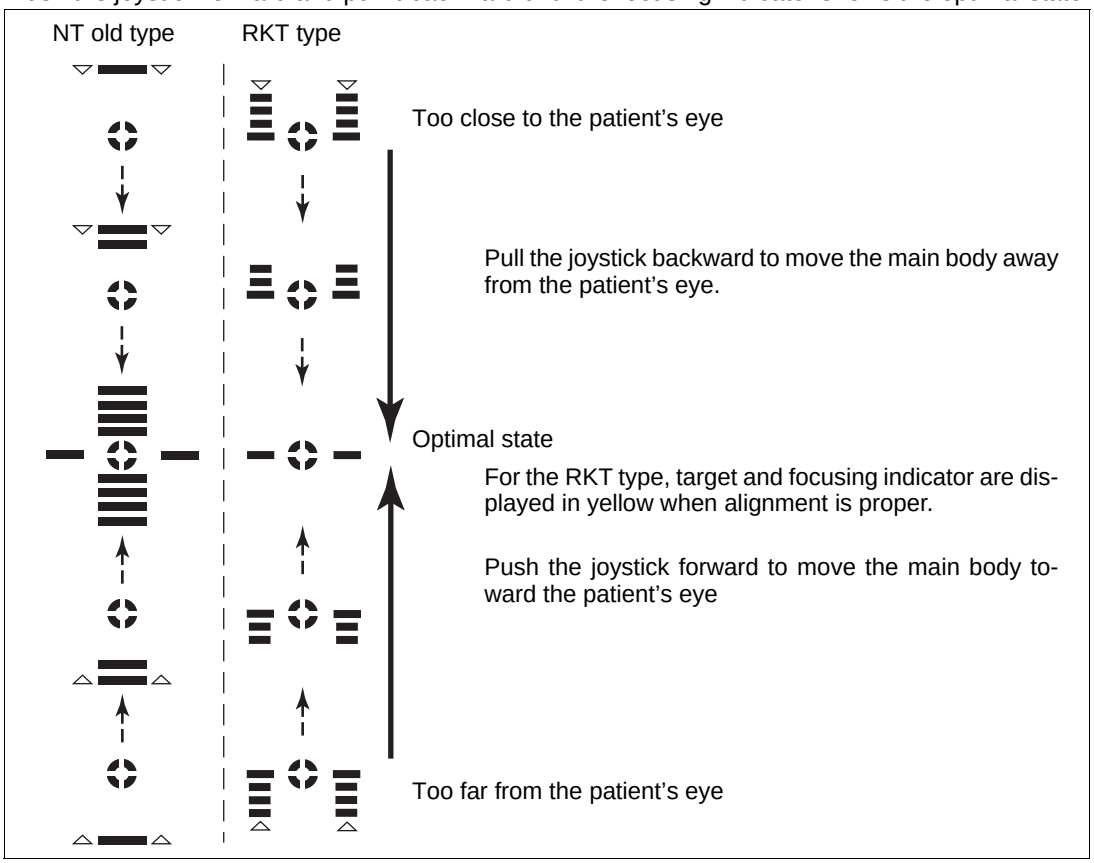

4 Start the measurement.

- When the auto shot function is on:

The measurement takes place automatically when the device is best aligned and focuses on the eye.

Note

- The operator can start the measurement by pressing the start button.

  Press the start button to start the measurement when it takes some time until the measurement takes place for patients who often blink.

- If the alignment spot appears blurry on the cornea because of corneal wound, etc., the device may not start the measurement even when the proper alignment and focus are obtained.

  Press the start button to start the measurement.

- When the auto shot function is off:

Press the start button to start the measurement.

Note

- To obtain accurate measured data, measure wide-open, fixated eyes on condition that the patient is placed in a stable position.
- Air may be puffed while the eye is blinking. In this case, accurate measurement data cannot be obtained and the patient will feel uncomfortable.

  Pull the joystick backward and wait until the eye stops blinking.

- If the measurement was not performed correctly for some reasons, an abbreviated error message is displayed above the measurement range indication.

  In this case, eliminate the cause of the error, following the suggestions in the table below and perform the measurement again.

<Error messages during the measurement>

Error message	Description
ALM (Alignment error)	Alignment is not proper. Perform the alignment and the measurement again.
APL (Applanation error)	As the eye was not opened enough, corneal applanation was insufficient. Instruct the patient to open his or her eyes wider. If the patient cannot do so, ask an assistant to open the eyelids wider by using a swab, etc.
OVR (Over the measurement range)	The intraocular pressure exceeds the preset measurement range. Switch the measurement range to “APC 60” or “60” and perform the measurement again.
BLK (Blinking of the eye)	The measurement is impossible because of blinking and slight movement of the eye. Instruct the patient not to blink or move the eye until the measurement is completed. After the eye stopped blinking and moving, perform the measurement again.
PCE (APC error)	The patient’s eye cannot be measured with the air pressure which is controlled by the APC function because of substantial fluctuation in intraocular pressure. Switch the measurement range from “APC 40” to “40” or from “APC 60” to “60”.
TOO CLOSE	The space between the patient’s eye and the air nozzle is 9 mm or less. Pull the joystick backward to increase the space between them.
NO SEARCH	The alignment spot cannot be detected.
CHECK THE EYE	This error appears when five consecutive APL errors with measurement values occur. Check the condition of the patient’s eye. This error message is not displayed when five consecutive APL errors occur while obtaining no measurement data sets.
OPEN THE EYE WIDER	Alignment is proper, but the eyelid detection lights cannot be detected. Instruct the patient to open his/her eyes wider. This error occurs only when the eyelid detection mode is turned on.

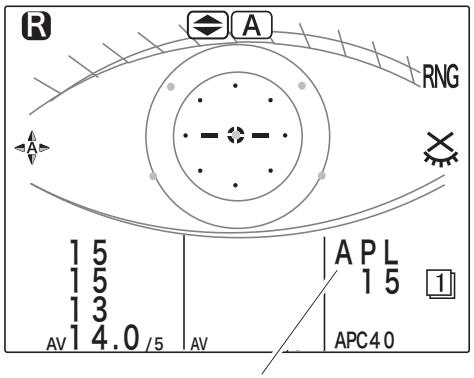

Error message and measured data

○ If the “CHECK THE EYE” error occurs:

Check the condition of the patient’s eye.

If the patient cannot open the eye wide or eyelashes are over the applanation area, you have to help the patient open the eye wide.

For a watery eye, have the patient blink his or her eyes, or wipe the tears.

The error is cleared when normal measured data is obtained.

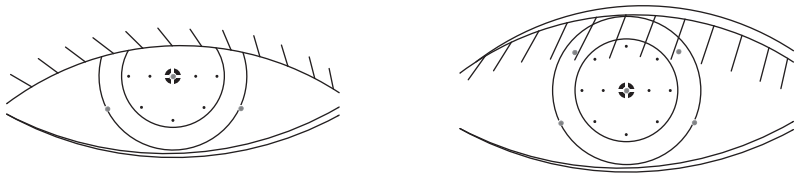

Eyelid is over the applanation area. Eyelashes are over the applanation area.

The APL error may occur in a row even though the eye seems to be in normal conditions.

In this case, reset the 01. SET LOW CONF parameter to “YES” and perform the measurement again. The measurement value is displayed with a * mark, indicating low confidence data.

For the setting procedure, see “2.6 Parameter Settings” (page 41).

The measurement may be performed and measured data may be displayed even though a measurement error (APL or ALM) occurred. Such data with “ * ” is referred to as “low confidence data”.

The low confidence data is cleared together with the error message; it is also possible to maintain the measured data with “ * “ on the screen by setting the corresponding parameter.

5 Measured data is displayed on the screen.

Measured data and average data are displayed on the screen.

After air is puffed, and the charge indicator is displayed for several seconds to indicate that the device is in standby mode.

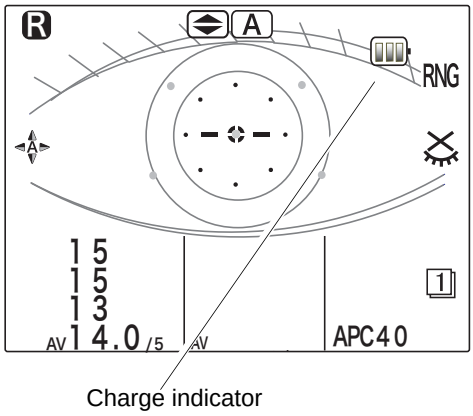

6 Measurement completes.

End measurement by manipulating the joystick backward because measurement is performed repeatedly regardless of the set times.

7 Pull the joystick backward once and move the main body to the other eye.

The measured eye indicator of the other eye blinks.

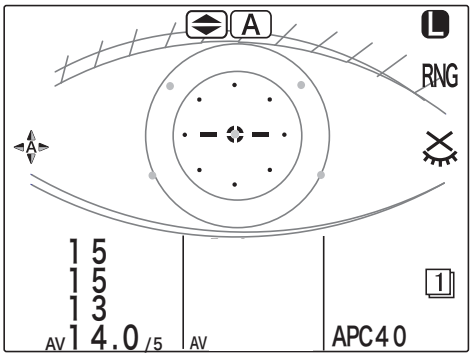

8 Measure the intraocular pressure of the other eye in the same way as Steps 4 to 6.

When the 11.PRINT parameter is set to AUTO, the measurement completes when the number of NT measurements specified with the 05. NT CONTINUE parameter is performed.

(Ex: When measuring in the order of right eye → left eye, the measurement completes when the measurement result for the left eye is obtained.)

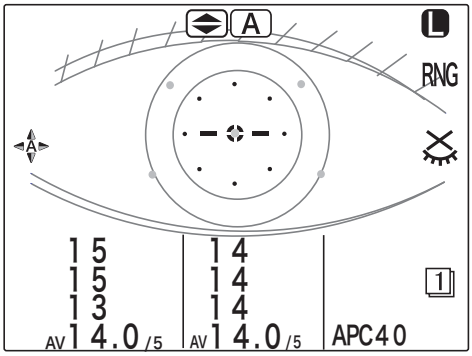

9 Inform the patient of the completion of the measurement and instruct him or her to take a comfortable position.

10 Print the measured results.

Printing operation varies according to the 11. PRINT parameter setting.

11. PRINT parameter	Printing method
MANUAL	Press the print button to print the measured data.
AUTO	Printing starts automatically at the completion of measurement. When the specified number of measurement is completed, printing starts.
NO	Printing does not occur.

For details of printing, see “2.5 Printing” (page 39).

Note

- Even when the 11. PRINT parameter is set to "NO", the data is exported to the external connecting device.
- The contents of printout are parameter-changeable.

  For details, see “2.6 Parameter Settings” (page 41).

11 When measuring the next patient, repeat Steps 7 to 9 in “2.2 Outline of Measurement” (page 20).

When completing the measurement, see “2.3 Completion of Measurements” (page 35).

○ Measuring puffed air pressure check during startup

It is possible to parameter-set whether or not to check the pressure of puffed air before measurements.

Checking contents at the device start-up are different according to the parameter setting.

Parameter name	Description
21. PRESSURE CHECK	Selection of whether or not to automatically check the air pressure from YES, NO, and DAY.

For details of the parameter settings, see “2.6 Parameter Settings” (page 41).

It is essential to maintain the accurate pressure of puffed air for the accurate tonometry. It is recommended to check the pressure of puffed air before NT measurement.

Checks are performed in the following order: “Check of the pressure of puffed air (40 mmHg and 60 mmHg)”

The checks disabled by the corresponding parameters are skipped.

Note

- All the checks are performed automatically.
- If the sensor detects a patient, it is assumed that the patient's chin is placed on the chinrest and puffed air pressure check is not performed.

1) After the title screen is displayed, “PRESSURE TEST MODE / CHECKING 40” is displayed and the test of the puffed air of 40 mmHg is performed.

   Wait until the check result is displayed.

```
PRESSURE TEST MODE
CHECKING  40
```

2) The check result is displayed.

   - PRESSURE TEST OK” is displayed:

     The air nozzle is clean.

```
PRESSURE TEST MODE

PRESSURE TEST OK
```

   - If one of the following messages is displayed:

     After the completion of all the checks, turn the device off once and check the air nozzle for soiling. If the air nozzle is soiled, wipe it clean of soling.

Error message
PRESSURE PEAK ERROR
PRESSURE SLOPE ERROR
NO PRESSURE UP

After the completion of the checks, the displayed “PRESSURE PEAK ERROR (40)” message is printed out.

3) The test of the puffed air of 60 mmHg is performed in the same way.

   Confirm the check result.

   If the “PRESSURE PEAK ERROR” message is displayed, the “PRESSURE PEAK ERROR (60)” message is printed out after the completion of the check.

```
PRESSURE TEST MODE
CHECKING  60
```

4) At the completion of the checks, the screen returns to the measurement screen.

Note

- For the cleaning procedure of the air nozzle, see “4.5.1 Cleaning air nozzle” (page 71).

2.3 Completion of Measurements

○ Normal shutoff

1 Turn off (○) the power switch.

It is allowed to turn off the power with any screen displayed.

2 To exit measurements, inspect the air nozzle etc. for soiling and clean them.

See “4.5 Cleaning” (page 71).

3 Clean the forehead rest and chinrest and place a dust cover over the device.

Always keep them clean for the next use.

Note

- Be sure to put the dust cover on whenever the device is not in use.

○ Shutoff before transporting the device

Before the device is transported, put the device in packing mode. In packing mode, the measuring unit and chinrest are automatically set in preparation for transportation.

1 Inspect the air nozzle etc. for soiling and clean them.

See “4.5 Cleaning” (page 71).

2 Turn the power switch off (○) to shut off the device once.

3 Turn on the power switch (|) while pressing the chinrest down button ▼.

The device starts putting itself into packing mode. Wait for a while until a message is displayed on the screen.

4 When the “PACKING POSITION IS COMPLETED / SHUT DOWN PLEASE” message is displayed, turn the power switch off (○).

Ensure that the chinrest and measuring unit are at their lower mechanical limits.

```
PACKING MODE

PACKING POSITION
  IS COMPLETED
SHUT DOWN PLEASE
```

5 **Pull the main body fully to the side on which the main body is laid down, fix the main body with the locking lever and gently lay down the device.**

6 **Disconnect the power cord, interface cables etc.**

7 **Raise the device and flip up the locking lever to unlock the main body.**

8 **Pack the device with the original packing material.**

2.4 Other Modes

2.4.1 Sleep mode

The device goes into sleep mode automatically to save power if no button have been pressed for a certain period of time.

The time that the device goes into sleep mode can be selected from 5 minutes, 10 minutes, 15 minutes, or NO (no sleep mode) with the 23. SLEEP parameter (factory setting: 5 minutes).

Sleep mode places the device into the following conditions:

- The LCD display goes off.
- The memory indicator blinks.

The device recovers to normal mode from sleep mode by the following methods:

- Press any button.
- Manipulate the joystick to move the base R or L.

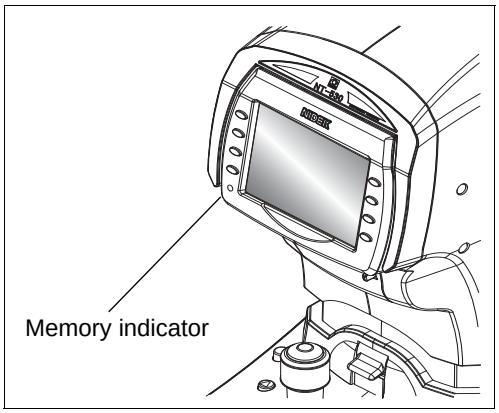

Note

- Depending on the status of the LCD display, the device may not go into sleep mode.
  When the PARAMETER SETTING screen is displayed, the device does not go into sleep mode.

2.4.2 Eyelid detection mode

With this mode, the device always checks the eye for the amount of eye-opening and the measurement takes place automatically only when the eyelid is opened wide.

○ Activating and cancelling eyelid detection mode

Press the eyelid detection mode button to activate or cancel the mode.
When eyelid detection mode is canceled, the eyelid detection cancel marker " " is displayed in the lower right of the screen.

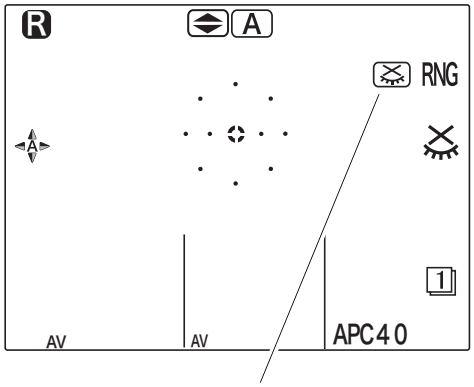

Eyelid detection cancel marker

○ About eyelid detection mode

When eyelid detection mode is activated, eye-opening is checked by the eyelid detection lights as shown on the right. (When the eyelid is over the applanation area, the detection lights disappear.)
The measurement takes place automatically when the eyelid is opened wide on condition that alignment and focusing are obtained.
If eye-opening is insufficient, the "OPEN THE EYE WIDER" message is displayed to warn the operator; under the condition, the measurement does not take place automatically.

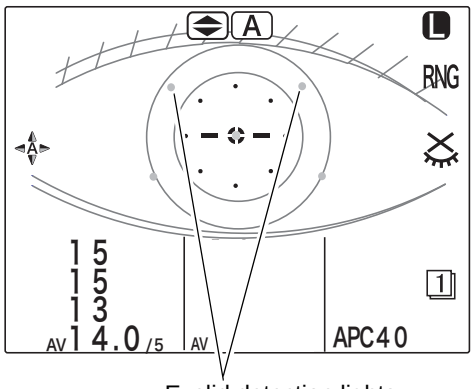

Eyelid detection lights

Note

- It is recommended to cancel eyelid detection mode only when it is difficult to perform the measurement with the eyelid detection mode activated.

  The cancellation of the mode may result in increase in the occurrence of measurement errors and increase in fluctuations in measured data.

2.5 Printing

2.5.1 Printing measured data

Measured data is printed out by pressing the print button after measurement.

Printing completes with paper still attached so that it does not fall. Tear off the paper to detach.

Note

- When the 11. PRINT parameter is set to “AUTO”, printing starts automatically when the measurements of both eyes complete.

  The measurement is completed when the number of the measurement set by the parameter is performed.
- Do not touch the printer paper while measured data is printed out.

  A loss of text and patchy printed text may result.
- The memory indicator will be lit while measured data is being stored in the memory. As long as the indicator is lit, data can be printed any number of times.
- After printout, the existing data will automatically be cleared when the next measurement has begun. For information, when the 13. PRINT&CLR parameter is set to “YES”, data is automatically cleared just after printout.
- When the memory indicator is lit, holding down the clear button ( ) for about a second clears the existing data completely.
- When the memory indicator is not lit, the print button ( ) serves to feed the paper.

<Sample printout >

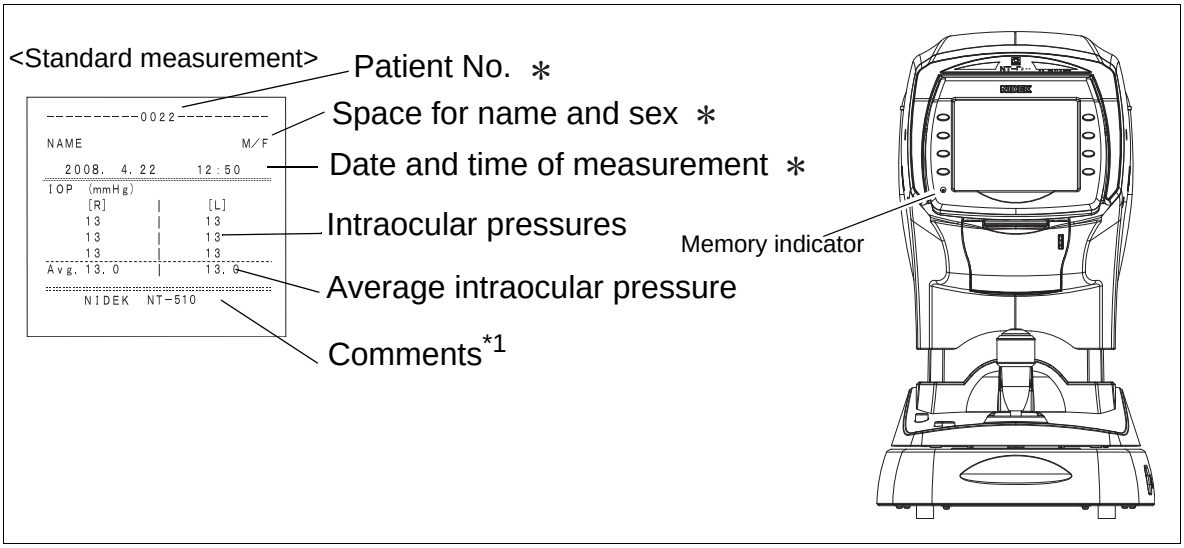

Note

- Items marked with “ ＊ ” indicate whether or not to print according to parameter settings.

  See PRINT1 of “2.6.1 Parameter tables” (page 44)

***1 Comments**

It is possible to enter the desired letters or symbols.

See “2.6.4 Entering comments” (page 57) for the entering method.

2.5.2 Printing parameter settings

The present parameter settings, set time, comments and maintenance program versions are printed out.

1 Press the parameter button for about a second.

The PARAMETER SETTING screen is displayed. The parameter No. and parameter names are displayed.

See “2.6 Parameter Settings” (page 41)for details on the parameters.

2 Press the print button .

The parameter settings are printed as in the right.

The parameter settings are printed regardless of the displayed page on the PARAMETER SETTING screen, all the parameter settings are printed.

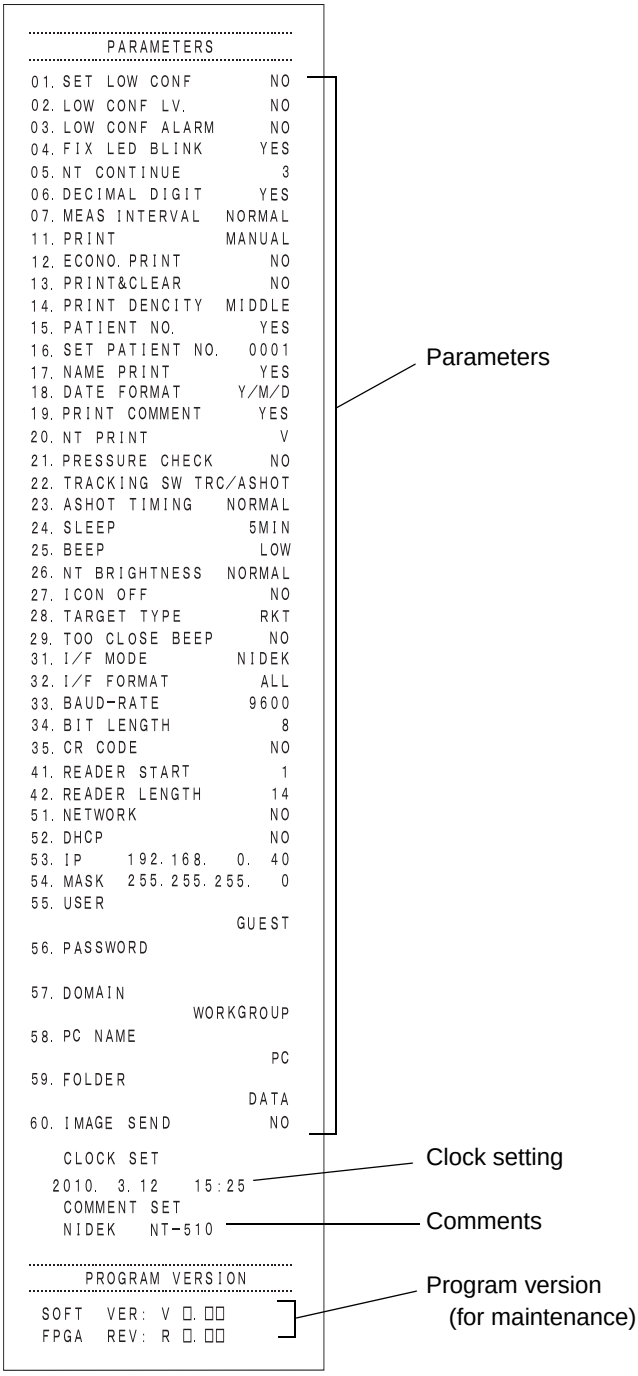

2.6 Parameter Settings

The NT-510 is provided with parameters that set various functions according to the user's usage pattern. The procedure for checking and changing the parameter settings is explained.

1 Press the parameter button for about a second.

The PARAMETER SETTING screen is displayed and parameter items are displayed.

The currently selected parameter item is highlighted.

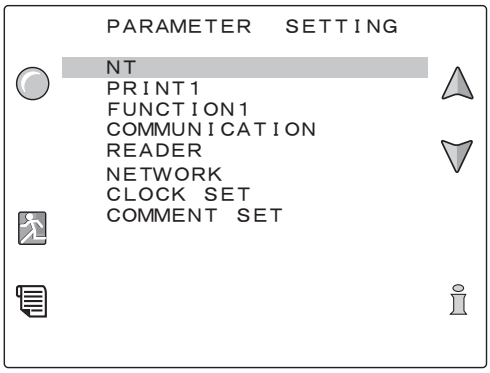

2 Press the up/down button to select a parameter to be changed.

For details of the parameter items, see "2.6.1 Parameter tables" (page 44).

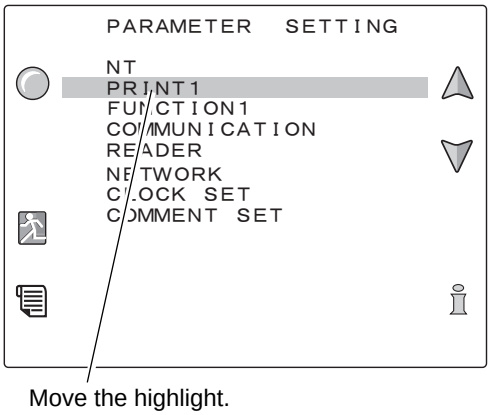

Up button	Moves the current selection up.
Down button	Moves the current selection down.

Note

- For procedure when NETWORK is selected, see "2.6.2 Setting Network function" (page 50).
- For procedure when CLOCK SET is selected, see "2.6.3 Setting date and time" (page 55).
- For procedure when COMMENT SET is selected, see"2.6.4 Entering comments" (page 57).
- When the Information button is pressed, the copyright information of the image data or software tool used is displayed.
- When the Print button is pressed, the setting contents can be printed.
  For details of the printing, see "2.5.2 Printing parameter settings" (page 40).

3 Press the execute button to switch to the [PRINT1] screen etc.

Parameters and their settings are displayed.

A parameter that is being selected is highlighted.

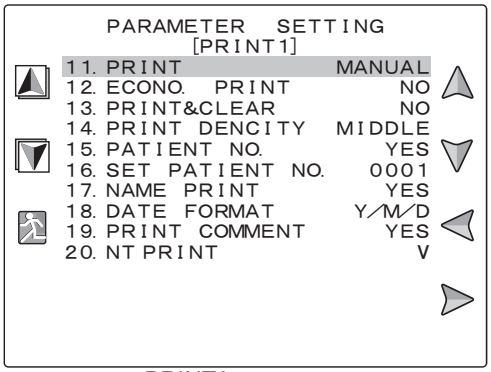

PRINT1 screen

4 Press the up/down button to select a parameter to be changed.

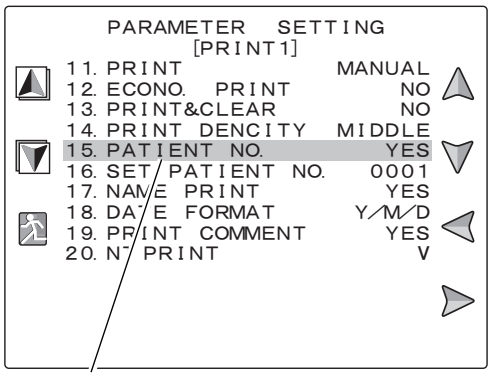

Move the highlight.

Up button	Moves the current selection up.
Down button	Moves the current selection down.

5 Press the right button or left button to change the parameter setting.

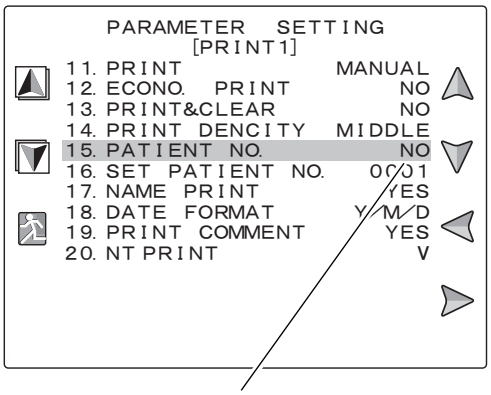

Parameter setting changes.

Right button	Selects the next parameter option.
Left button	Selects the previous parameter option.

For the settings changed when the button is pressed, see “2.6.1 Parameter tables” (page 44).

Note

- Underlined options in the parameter tables indicate factory settings.

To change the page of parameter:

Page up button	Displays the previous page.
Page down button	Displays the next page.

6 Repeat Steps 4 to 5 to change the desired parameter settings.

7 To finish setting the parameters, press the exit button .

The screen returns to the step1 PARAMETER SETTING screen.

8 To finish setting the parameters, press the exit button again.

The screen returns to the measurement screen.

The set parameter settings are saved even after power-off.

Note

- The parameter settings will be maintained in the memory even though the power switch is turned off.
- After changing parameter settings, turn off the device after pressing the exit button .
  Otherwise, parameter settings are not stored.

○ Resetting the parameters

To reset the parameters to the factory settings, follow the steps below.

Note

- Settings for comment, date, and network function cannot be reset.

1) Turn off the device.
2) Turn on the power switch while holding down the third function button from the top on the right of the LCD display.
3) The parameters are reset to the factory settings and the device is turned on.

2.6.1 Parameter tables

[NT (NT measurement)]

* Underlined options indicate factory settings.

No.	Parameter	Settings
01	SET LOW CONF	YES / NO
02	LOW CONF LV.	YES / NO
03	LOW CONF ALARM	YES / NO
04	FIX LED BLINK	YES / NO
05	NT CONTINUE	1 to 10 (Factory setting: 3)
06	DECIMAL DIGIT	YES / NO
07	MEAS INTERVAL	SHORT / NORMAL / LONG

1 : SET LOW CONF (Display of low confidence data)

Selection of whether or not to display low confidence data.

2 : LOW CONF LV (Display of confidence level)

Setting of how to express the level of low confidence data when the 01. SET LOW CONF parameter is set to “YES”.

YES	The level is expressed by “*3” to “*1”. The smaller the number is, the lower the confidence of the data becomes.
NO	Low confidence data is marked by “*” regardless of the level of confidence.

3 : LOW CONF ALARM (Warning of low confidence data)

Selection of whether or not to produce a beep when low confidence data is obtained during measurement.

4 : FIX LED BLINK (Blinking of the fixation light)

Setting of blinking or not blinking of the fixation light during measurement.

ON	The fixation light blinks.
OFF	The fixation light does not blink.

5 : NT CONTINUE (NT measurement count)

Setting of the number of NT measurements per eye after which printout is automatically started.

This parameter setting takes effect when the 11. PRINT parameter is set to “AUTO”.

Note

- If the 01. SET LOW CONF parameter (display of low confidence data) is set to “YES” (display), even low confidence data is counted as a NT measurement.

  Do not change this parameter during NT measurement.

6 : DECIMAL DIGIT (Decimal point representation)

Set the measurement average value to either decimal point representation or integer representation.

YES	Displays the average value to one decimal place.
NO	Rounds off to the nearest integer.

7 : MEAS INTERVAL (Measurement interval)

Set the measurable time interval in the measurement mode.

“SHORT” and “LONG” can be set in addition to “NORMAL”.

[PRINT1 (Print setting 1)]

* Underlined options indicate factory settings.

No.	Parameter	Settings
11	PRINT	MANUAL / AUTO / NO
12	ECONO. PRINT	YES / NO
13	PRINT&CLEAR	YES / NO
14	PRINT DENCITY	LOW / MIDDLE / HIGH
15	PATIENT NO.	YES / NO
16	SET PATIENT NO.	0001 to 9999
17	NAME PRINT	YES / NO
18	DATE FORMAT	Y/M/D / M/D/Y / D/M/Y / NO
19	PRINT COMMENT	YES / NO
20	NT PRINT	V / H

11 : PRINT (printing)

Selects the method of starting printing.

MANUAL	Press the print button to print the measured data out.
AUTO	Printing starts automatically at the completion of measurement. When the specified number of measurement is completed, printing starts.
NO	Printing does not occur.

12 : ECONO. PRINT (economical printing)

When “YES” is set, printing is performed with reduced line-spacing to save printer paper.

13 : PRINT&CLEAR (clearing of data after printing)

Selects whether or not to erase the measured data in the memory immediately after printing.

When this parameter is set to “NO”, the measured data is erased when the next measurement is performed after printing.

14 : PRINT DENCITY (density of printed text)

Selects the density of text to be printed.

15 : PATIENT NO. (printing of patient number)

Selects whether or not to print the patient No.

16 : SET PATIENT NO. (setting of patient ID)

Selects the patient number in the range from 0001 to 9999.

Pressing the left button at the beginning resets the counter to 0001.

17 : NAME PRINT (printing of name)

Selects whether or not to provide printing spaces for the patient’s name and sex.

18 : DATE FORMAT (date format)

Selects the format of date.

Y/M/D	Year, Month, Date
M/D/Y	Month, Date, Year
D/M/Y	Date, Month, Year
NO	No printing

19 : PRINT COMMENT

Selects whether or not to print comments.

20 : NT PRINT (NT print format)

Printout format in measurement

V	Prints the NT measured data vertically.
H	Prints the NT measured data horizontally.

Printout samples

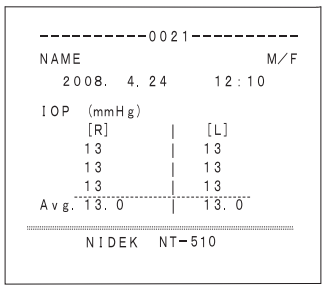

V:Vertical format

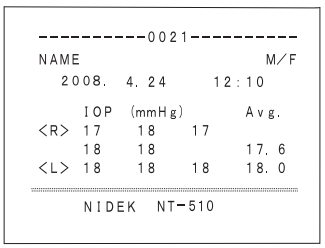

H:Horizontal format

[FUNCTION 1 (Various functions 1)]

* Underlined options indicate factory settings.

No.	Parameter	Settings
21	PRESSURE CHECK	YES / NO / DAY
22	TRACKING SW	TRC/ASHOT / ASHOT ON / ASHOT OFF
23	ASHOT TIMING	NORMAL / FAST
24	SLEEP	5MIN / 10MIN / 15MIN / NO
25	BEEP	LOW / HIGH / NO
26	NT BRIGHTNESS	NORMAL / LIGHT
27	ICON OFF	YES / NO
28	TARGET TYPE	RKT / NT OLD
29	TOO CLOSE BEEP	YES / NO

21 : PRESSURE CHECK (Puffed air pressure check)

Selection of whether or not to automatically check the air pressure.

The pressure of puffed air is automatically checked during startup and the check result is displayed. If the pressure of the puffed air is abnormal, a message is printed out.

DAY	The air pressure is checked at the first startup of the day.
YES	The air pressure is checked at every startup.
NO	The air pressure is not checked.

22 : TRACKING SW (tracking button)

Selects the auto button function.

TRC/ASHOT	It is possible to select a combination of the auto-tracking function (ON/OFF) and auto shot function (ON/OFF). → → → (none) → . . .
ASHOT ON	It is possible to select the type of the auto-tracking function (ON/OFF). The auto shot function is constantly turned on. → → . . .
ASHOT OFF	It is possible to select the type of the auto-tracking function (ON/OFF). The auto shot function is constantly turned off. → (none) → . . .

23 : ASHOT TIMING

The timing of the auto shot is toggled between "NORMAL" and "FAST".

The Auto shot mark is A when "NORMAL" is selected, and AF when "FAST" is selected.

Note

- When the 23. ASHOT TIMING parameter is set to “FAST”, the frequency of occurrence of the ALM error or low confidence data may become high.

24 : SLEEP (sleep time)

Selects the auto-sleep function.

The LCD is shut down automatically after a set period during the power is turned on.

Select the time period from 5 (min.), 10 (min.), 15 (min.) or NO.

25 : BEEP (beep sound)

Sets the pitch of the beep sound (electronic beeper sound) that is produced during measurement.

LOW	The pitch of the produced beep sound is low.
HIGH	The pitch of the produced beep sounds is high.
NO	No beep sound is produced.

26 : NT BRIGHTNESS (light intensity of the measurement screen)

Brightness of the LCD screen during the measurement.

Select the brightness from “NORMAL” or “LIGHT”.

27 : ICON OFF (icon display)

Selects whether to display the icon buttons on the measurement screen.

YES	Touch icons are not displayed. To use each function of the function buttons (except for clear and print), follow the procedure below: 1) Press a function button (except for clear and print) on the measurement screen to display the icons. 2) When icons are displayed, each button functions. 3) After printing by pressing the Clear button or Print button , the button icons disappear. The button icons also disappear when the measurement starts.
NO	Touch icons are always displayed.

28 : TARGET TYPE (Target type)

Selection of the type of the target and focusing indicator that are displayed in the measurement mode.

RKT	During measurement, the standard target and focusing indicator are displayed (Factory setting).
NT OLD	During measurement, the focusing indicator used with the NIDEK earlier model are displayed.

29 : TOO CLOSE BEEP (Beep sound when TOO CLOSE error occur)

Selection of whether or not to set the beep sound when TOO CLOSE error occur.

YES	Beep sound is generated when the error occur.
NO	Beep sound is not generated when the error occur.

[COMMUNICATION (Communication function)]

Sets communication for RS232C connection with the PC.

* Underlined options indicate factory settings.

No.	Parameter	Settings
31	I/F MODE	NIDEK / NCP10
32	I/F FORMAT	ALL
33	BAUD-RATE	9600 / 4800 / 2400 / 1200
34	BIT LENGTH	7 / 8
35	CR CODE	YES / NO

31 : I/F MODE (communication mode)

Selects the device to communicate with.

NIDEK	Communication with a NIDEK-brand device
NCP10	NCP10-compliant device

32 : I/F FORMAT (communication format)

Selects the format of data to be transmitted. For the NT-510, I/F FORMAT is fixed to ALL.

ALL	All data are transferred.

33 : BAUD-RATE

Selects the baud-rate (bit transmission speed) for communication.

34 : BIT LENGTH

Selects the bit number for a single character used for communication.

35 : CR CODE (line feed code)

Selects whether or not to attach CR (carriage return) code at the end of data to be transmitted.

[READER (Barcode/magnetic card reader function)]

* Underlined options indicate factory settings.

No.	Parameter	Settings
41	READER START	1 to 250
42	READER LENGTH	1 to 14

41 : READER START (Position to start reading)

Sets the position to start reading.

42 : READER LENGTH (Length of reading)

Sets the length of the data to be read.

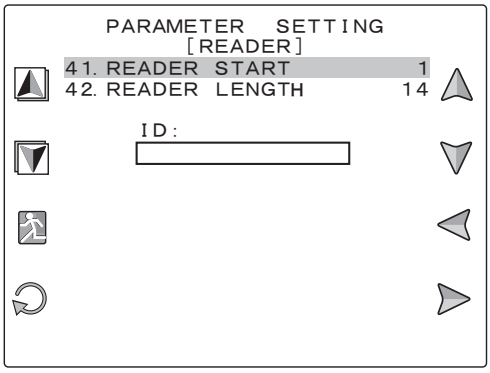

In the ID field, when read after setting is checked, the read result of set conditions is displayed.

Press to display all data including digits other than set digits. Press again to return to the screen as shown to the right.

2.6.2 Setting Network function

Sets the parameters necessary for connecting to computer via network (LAN).

Note

- NIDEK service personnel sets the LAN connection with permission from the network administrator of the facility.
- Before connecting the network, obtain the following information from the network administrator of the facility.
  1. DHCP can be set to on.
  2. TCP/IP: IP address and subnet mask of the NT-510
  3. File sharing of the computer: User name, password, and domain
  4. Folder setting and name in the computer in which the measured data is to be saved
- After setting and changing the network function, return to the measurement screen once then reboot (Power OFF → ON) the device.

  The settings become active after rebooting.

1 Keep pressing the Parameter button for a second.

The “PARAMETER SETTING” screen is displayed.

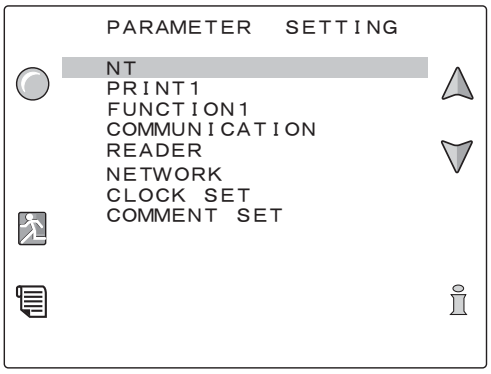

2 Select “NETWORK” by pressing the DOWN button or UP button and select “NETWORK”.

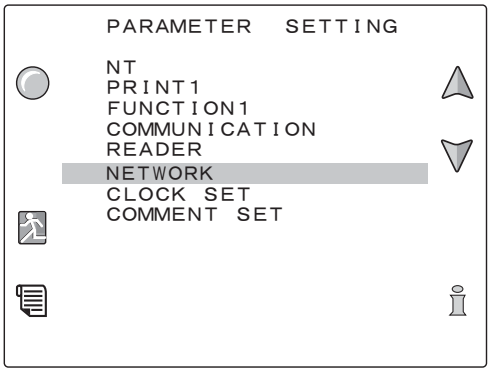

3 Press the execute button to switch to the NETWORK screen.

Parameters related to NETWORK is displayed.

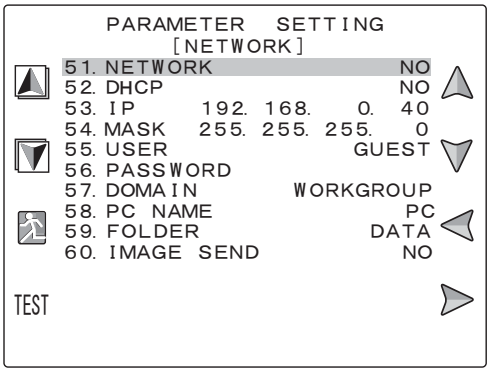

* When the TEST button on the lower left in the NETWORK screen is pressed, whether or not the LAN interface cable is connected to the NT-510 is checked. A message is displayed for two seconds with a beep sound.

When the LAN interface cable is connected

When the LAN interface cable is not connected

* Underlined options indicate factory settings.

No.	Parameter	Settings
51	NETWORK	YES / NO / ACK*1
52	DHCP	YES / NO
53	IP	0 to 255, 0 to 255, 0 to 255, 0 to 255 (Factory setting: 192, 168, 0, 40)
54	MASK	0 to 255, 0 to 255, 0 to 255, 0 to 255 (Factory setting: 255, 255, 255, 0)
55	USER	User name can be input up to 17 digits (Factory setting: GUEST)
56	PASSWORD	Password can be input up to 17 digits (Factory setting: none)
57	DOMAIN	Domain name can be input up to 17 digits (Factory setting: WORKGROUP)
58	PC NAME	PC name can be input up to 17 digits (Factory setting: PC)
59	FOLDER	Folder name can be input up to 17 digits (Factory setting: DATA)
60	IMAGE SEND	NO

51 : NETWORK (Network connection)

Sets whether to connect to the network (LAN) [YES], not connect [NO], or connect and wait for reply [ACK]*1.

Press ▶ or ◀ to change the setting.

52 : DHCP

Sets whether to turn on DHCP connection [YES] or not [NO].

Press ▶ or ◀ to change the setting.

To enable the setting, return to the measurement screen, then restart the device.

***1 When ACK is set, if the data is not deleted within 5 seconds by the receiving software, ERR772 is displayed.**

53 : IP

Input the IP address. The input procedure is as follows.

* When "52. DHCP" is set to “YES”, the IP address is displayed as " 0. 0. 0. 0" and cannot be selected.

To enable the setting, return to the measurement screen, then restart the device.

1) Press or to select "53. IP".

The screen is as shown to the right.

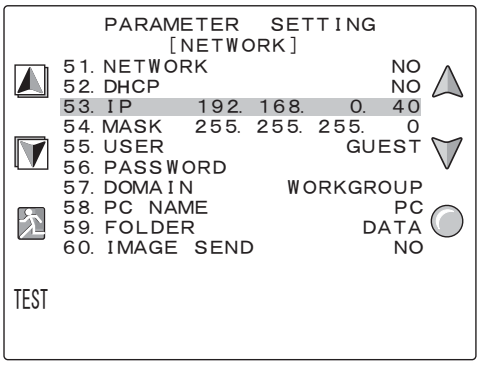

2) Press the execute button .

The screen changes to the IP address input screen.

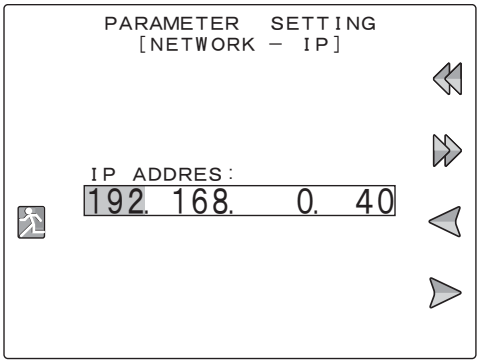

3) Change the IP address.

Press , , or start button	**Moves the cursor.**
Press or rotate the joystick counterclockwise	**Decreases the input value.**
Press or rotate the joystick clockwise	**Increases the input value.**

4) When is pressed, the screen changes to the screen confirming the change of input IP address.

YES: Set the change.

NO: Cancel the change.

Press , or rotate the joystick to select YES or NO.

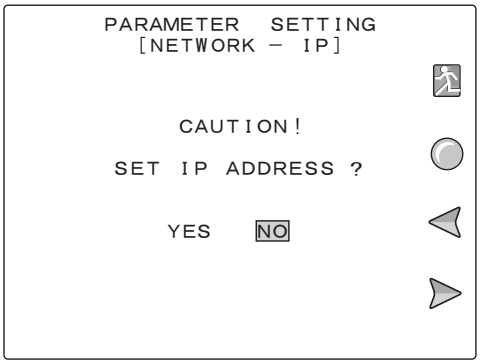

5) Press the execute button or start button to set “YES” or “NO”.

The screen returns to Step 1) screen. In the screen, the input IP address is displayed.

When returning to the IP address input screen, press .

54 : MASK

Input subnet mask.

The input procedure is same as "53. IP". Refer to above "53. IP".

* When "52. DHCP" is set to YES, subnet mask is displayed as "0. 0. 0. 0" and cannot be selected.

To enable the setting, return to the measurement screen, then restart the device.

55 : USER

Input the user name of the connected computer. The input procedure is as follows.

1) Press or to select "55. USER".

The screen is as shown to the right.

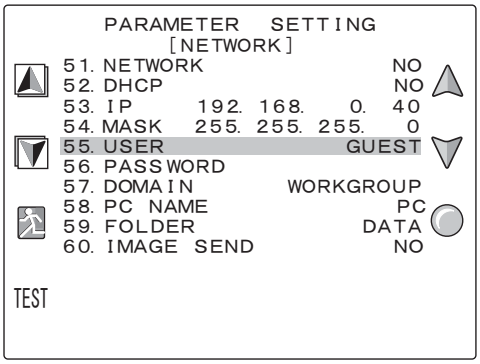

2) Press the execute button .

The screen changes to the user name input screen.

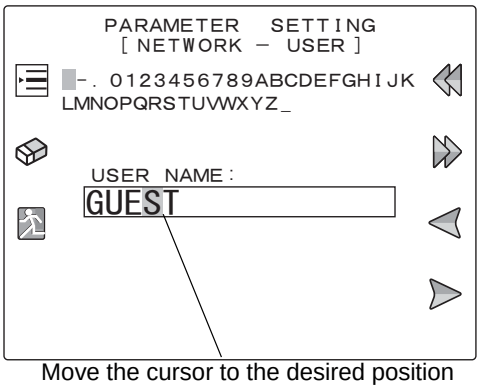

Move the cursor to the desired position

3) Change the user name.

Press or rotate the joystick counterclockwise	**Moves the input candidate (cursor) in the character list field to left.**
Press or rotate the joystick clockwise	**Moves the input candidate (cursor) in the character list field to right.**
Press	**Moves the cursor in the input field to left.**
Press	**Moves the cursor in the input field to right.**
Press or press the start button	**Determines the character to be entered and moves the highlight to the next digit.**
Press	**Erases the character at the cursor position and moves the highlight to the previous digit.**

4) When is pressed, the screen changes to the screen confirming the change of input user name.

YES: Set the change.

NO: Cancel the change.

Press , or rotate the joystick to select “YES” or “NO”.

5) Press the execute button or start button to set “YES” or “NO”.

The screen returns to Step 1) screen. In the screen, input IP address is displayed.

When returning to the user name input screen, press .

56 : PASSWORD

Input the login password for the user name of the connected computer.

The input procedure is same as "55. USER". Refer to above "55. USER".

57 : DOMAIN

Input the domain name of the connected computer.

The input procedure is same as "55. USER". Refer to above "55. USER".

58 : PC NAME

Input the machine name of the connected computer.

The input procedure is same as "55. USER". Refer to above "55. USER".

59 : FOLDER

Input the shared folder name of the connected computer to be exported the measured data file.

The input procedure is same as "55. USER". Refer to above "55. USER".

60 : IMAGE SEND

Images cannot be sent. This parameter is fixed as "NO".

2.6.3 Setting date and time

When the date and time of the printout is not correct, set the correct date and time.

Note

- If the device is not turned on for three weeks, the date and time may be shifted.

1 Press the parameter button for about a second.

The PARAMETER SETTING screen is displayed.

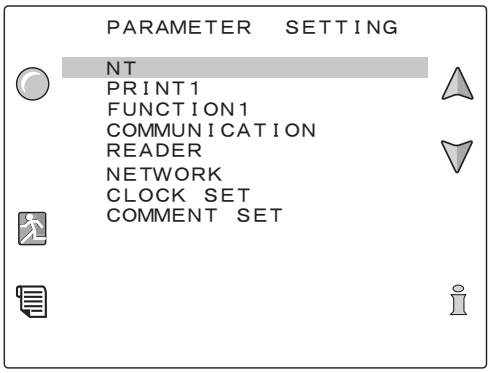

2 Press the down button to select the CLOCK SET parameter.

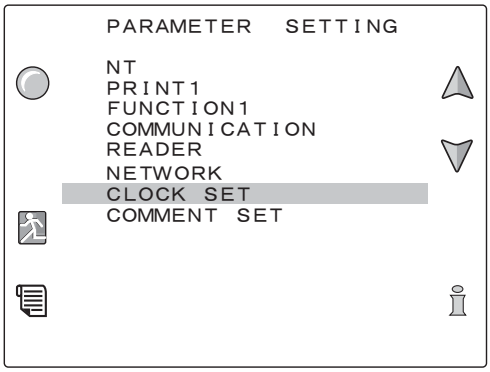

3 Press the set button to establish date and time setting mode.

The CLOCK screen is displayed.

The year is highlighted, indicating the currently selected, changeable items.

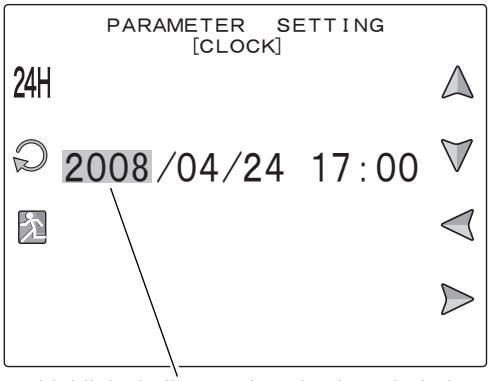

A highlight indicates that the item is being selected at the moment.

4 Press the up button or down button to move the highlight to an item to be changed.

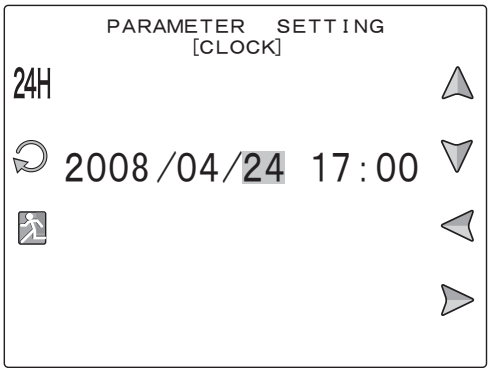

5 Press the right button or the left button to change the setting.

Right button	Increases the number.
Left button	Decreases the number.

To change the time format:

24H / AM/PM	Change the time format between the 24-hour and 12-hour.
	Changes the date format in the order of Y/ M/ D, M/ D/ Y, D/ M/ Y...

6 Repeat Steps 4 to 5 to set the date and time.

7 After entering comments, press the exit button to exit from comment setting mode.

As soon as the exit button is pressed, the internal clock is updated to the set date and time.

The screen is switched back to the PARAMETER SETTING screen.

8 Press the exit button to return to the measurement screen.

○ Battery recharging:

The battery is rechargeable. When you are operating the device for the first time after unpacking or when the device has not been operated for a long time (approximately one month or longer), the battery is discharged, and the internal clock may go wrong.

In such a case, turn on the device and leave it on to recharge the battery. The battery needs 24 hours for a full charge.

If the device is used for 8 hours a day, the device will have to be kept on for three days before the battery is fully recharged. Once the battery is fully recharged, the device operates normally for daily use.

(The lithium battery is not user replaceable.)

2.6.4 Entering comments

Comments to be printed can be changed (factory setting: “NIDEK NT-510”).

1 Press the parameter button for about a second.

The PARAMETER SETTING screen is displayed.

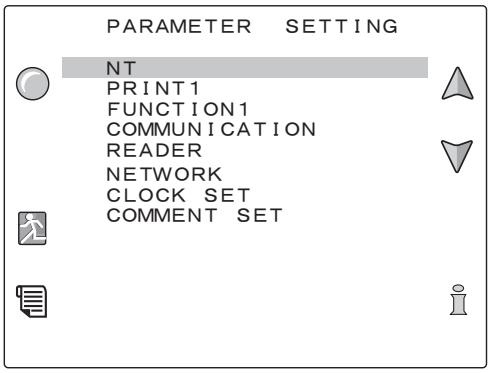

2 Press the down button to select the COMMENT SET parameter.

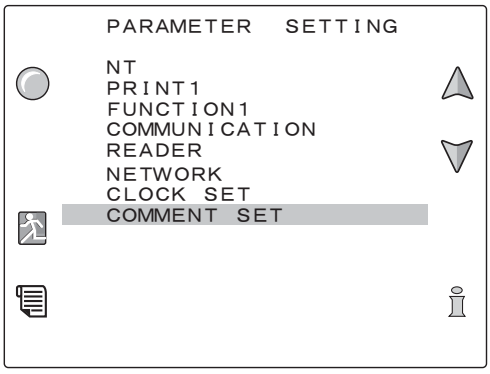

3 Press the set button to establish the comment setting mode.

The SET COMMENT screen is displayed.

In the lower part of the screen, the currently entered comments are displayed.

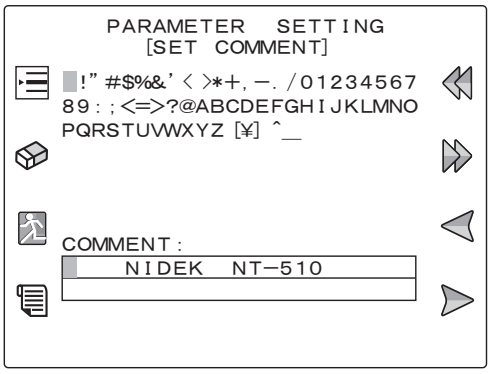

4 Press the right button ▶ or left button ◀ to select the position where a character is entered or changed.

The cursor indicates the position where a character is entered or changed.

Up to 24 characters can e entered in two lines.

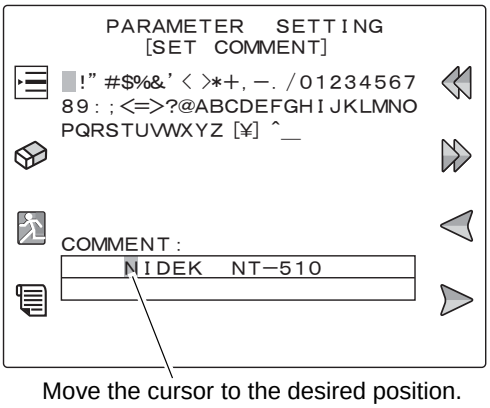

Move the cursor to the desired position.

5 Enter comments with the following buttons.

After moving the cursor of the character list to the desired character, press the OK button to confirm its entry.

The following buttons are available:

	Moves the current selection to the left in the character table.
	Moves the current selection to the right in the character table.
	Determines the character to be entered and moves the highlight to the next digit.
	Erases the character at the cursor position and moves the highlight to the previous digit. It is also possible to erase characters by entering a space (SP).
	Test prints the comment only.

6 Repeat Steps 4 to 5 to enter the desired comments.

7 After entering comments, press the exit button. After entering comments, press the exit button.

8 Press the exit button to return to the measurement screen.

The entered comments are saved.

Note

- When the start button is held down with the SET COMMENT screen displayed, comments return to the default setting (“NIDEK NT-510”).

3. OPERATION WHEN PERIPHERAL DEVICES ARE CONNECTED

The NT-510 exports measured data by connecting to an external device such as computer.
The NT-510 also reads patient's ID data by a USB-connected barcode or magnetic card reader.

⚠ **CAUTION**

- **Before connecting cables to devices, turn the devices off and disconnect the power cord from an outlet.**
  Malfunction may result.
- **Accessory equipment connected to the analog and digital interfaces must be certified according to the representative appropriate national standards (for example, UL 60950-1 for Data Processing Equipment, UL 60601-1 for Medical Equipment, and CSA C22.2 No. 601-1, EN 60601-1 and IEC 60601-1). Furthermore, all configurations shall comply with the system standard IEC 60601-1. Anyone who connects additional equipment to the signal input part or signal output part configures a medical system, and is therefore responsible that the system complies with the requirements of the system standard IEC 60601-1. If in doubt, consult the technical service department of your local representative.**

3.1 Connecting to Computer

3.1.1 Outline

Any data on printout can be exported to a computer.
The measured data exported to a computer can be managed by various database software.
There are two ways for connection, RS-232C connection and LAN connection.

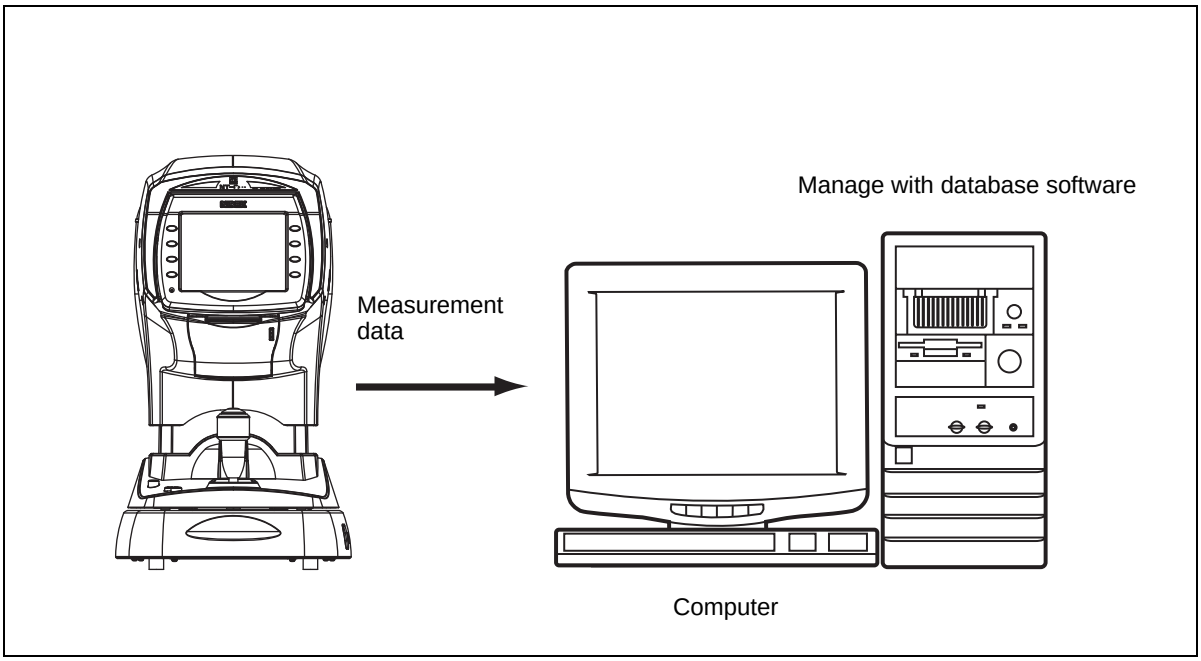

3.1.2 RS-232C connection

○ Connecting procedure

1 Connect a computer to the data output port (⊖▸) on the bottom of the NT-510 via an interface cable (optional).

Connect the cable with the device laid down.

Attach a ferrite core (optional) to the interface cable connector of the NT-510.

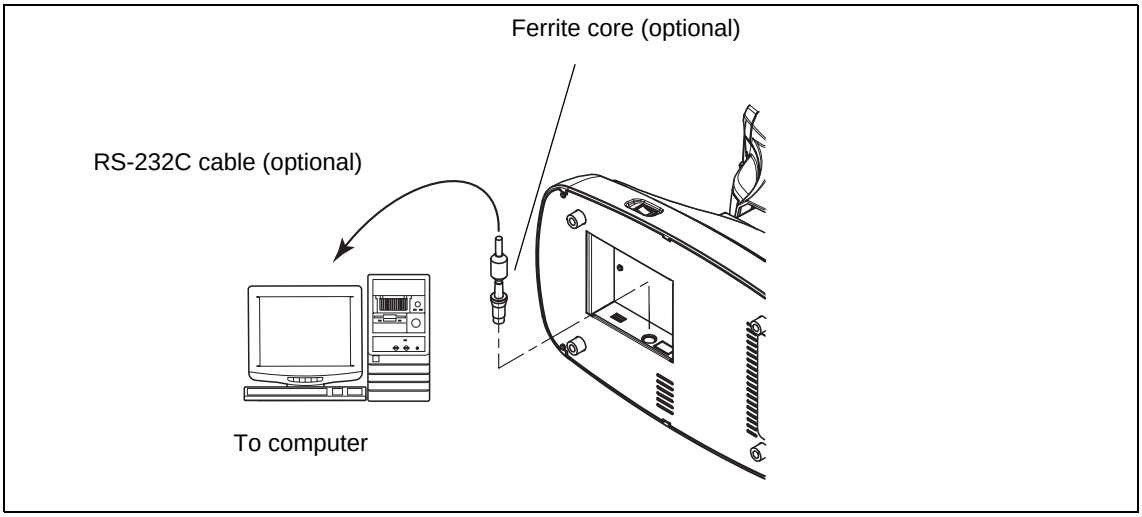

○ Operating procedure

1 After measurement, press the print button .

Perform the printing process in the standard manner.

See “2.2 Outline of Measurement” (page 20) and “2.2.2 Measurement” (page 26) for the measuring method.

See“2.5 Printing” (page 39) for printing.

2 The NT-510 automatically transmits data to the computer.

3 The measured data is printed.

Note

- For the RS-232C connection, the measured data is communicated with the interface cable in compliance with RS-232C.
- Disconnect the interface cable while pressing the button on the connector.

  When the cable is connected, the button is located on the underside of the connector.

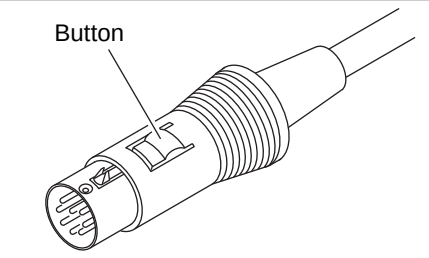

3.1.3 Network connection (LAN)

○ Connecting procedure

1 Connect a computer to the LAN port on the bottom of the NT-510 via a LAN cable.

Connect the cable with the device laid down.

Connect the other end of the LAN cable to the HUB connected to the receiver PC.

Attach a ferrite core (optional) to the interface cable connector of the NT-510.

The NT-510 and the parameters are set with permission from the network administrator of the facility.

For the parameter setting, see “2.6.2 Setting Network function” (page 50).

NIDEK service personnel performs all the connections.

⚠ **CAUTION** • **Be sure to connect to the PC via a network hub (HUB).**
Do not connect to the PC directly. A connection failure may occur.

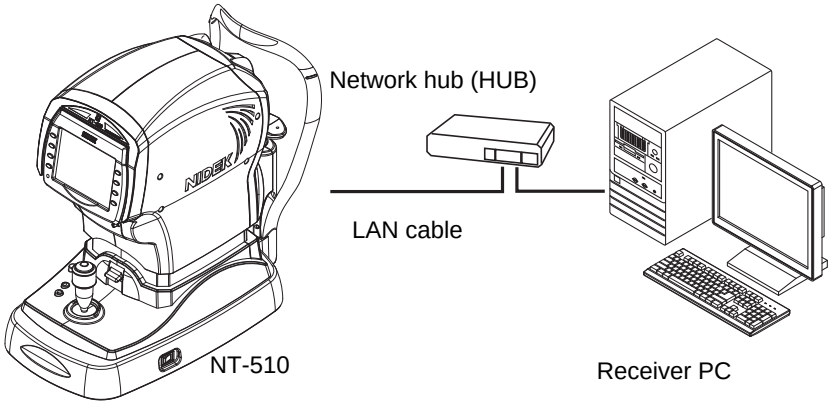

○ Operating procedure

1 After measurement, press the print button .

Perform the printing process in the standard manner.

See “2.2 Outline of Measurement” (page 20) and “2.2.2 Measurement” (page 26) for the measuring method.

See “2.5 Printing” (page 39) for printing.

2 The NT-510 automatically transmits data to the computer.

3 The measured data is printed.

Note
- When the 11.PRINT parameter is set to “NO”, error No. and measurement data is printed when the communication error is generated.

3.2 Connecting Barcode / Magnetic Card Reader

3.2.1 Outline

By connecting the optional barcode reader or magnetic card reader to the NT-510 via USB, the patient ID can be read to the NT-510.

Note

- The patient ID can be read before and after measurement but must be performed it before printing.

  If the patient ID is read while the printed measurement data is displayed, the NT-510 determines the displayed measurement data to be that of a previous patient and the data is automatically deleted.
- The latest patient ID input before printing is set as the patient ID to be printed.

  If a different patient ID is read, the patient ID cannot be deleted with the clear button ( ). In such a case, read the correct patient ID.

3.2.2 Connecting procedure

⚠ **CAUTION**

- **Only connect the provided barcode reader or magnetic card reader.**

  IDs may not be read properly, or the device malfunction may occur.

1 Connect the USB cable of the barcode or magnetic card reader to the USB-A port at the bottom of the NT-510.

Connect the cable with the device on its side.

Attach a ferrite core (optional) to the interface cable connector of the NT-510.

Check the READER parameter on the parameter setting screen that the patient ID can be read.

Note

- When the device power is turned on with the barcode or magnetic card reader is connected, a beep sound is generated.

  This sound indicate connection check and does not indicate an abnormal condition of the device.

3.2.3 Operating procedure of barcode / magnetic card reader

Read the patient ID using the barcode or magnetic card.
For the NT-510 side, the patient ID is printed with the measured result.

Note

- For the barcode, use "CODE39".
- For the patient ID, numerical characters, alphabetical characters, “_” and “-” symbols can be used.

  Other symbols are not recognized by the NT-510. All the unrecognized symbols are converted to “~”.
- Use the magnetic card that conforms to magnetic stripe format ISO 7811, AAMVA, and CA DMV.

4. MAINTENANCE

4.1 Troubleshooting

In the event that the device does not work correctly, correct the problem according to the following table before contacting NIDEK or your authorized distributor.

Symptom	Remedy
The LCD display does not turn on.	• The power cord may not be correctly connected. Reconnect it securely. • The power switch may not have been turn on. Check the power switch.
The LCD display does not turn on (not clear) even though the power is on.	• The sleep function may have been executed. Try to recover the monitor ON condition by pressing any button.
The screen disappears suddenly.	• Sleep mode may have been activated. Press any button to exit from sleep mode.
The main body cannot be moved laterally.	• The locking lever may be locked. Flip up the locking lever.
Data is not printed out.	• Check the printer paper. If the paper has been used up, load new printer paper. • The 11. PRINT parameter may be set to “NO”. Reset the parameter.
The printer does operate, however, printed results cannot be obtained.	• The printer paper may be loaded with the wrong side up. Set it with the correct side up.
When the power is turned on or the print button is pressed, “ERROR” or “NO PAPER” appears even though printer paper is loaded.	• Check that the printer cover is securely closed. Open the printer cover and close it securely. • The print button may have been pressed too soon after the printer cover was closed. After the printer cover is closed, it takes time for the printer to be ready.
Printer paper does not feed.	• Printer paper may be loaded in a tilted position or the core of the roll may not be placed properly. Open the printer cover and make sure that printer paper is properly loaded.

Symptom	Remedy
The auto-tracking function or auto shot function does not work.	• The auto-tracking function or auto shot function may not have been turned on. Turn them on with the auto button ◄A►. • Room illumination may be reflecting on the cornea. Change the location and try measurement again. • The auto-tracking function or auto shot function may not work on some eyes such as keratoconus or recently-operated cornea. In such cases, turn off the auto-tracking function and start measurement. • The patient who has substantial ocular ataxia or who cannot fixate his or her eyes, the auto-tracking function may not work. In such cases, turn off the auto-tracking function and start measurement. • If the device is installed in the vicinity of a window where the device is exposed to sunshine, light interference may adversely affect these functions. Change the installed position of the device and start measurement again.
A measurement error appears.	• The patient may have blinked during measurement. Instruct the patient not to blink and try measurement again. • The eyelid or eyelashes may obstruct measurement. Instruct the patient to open his/her eye wider. If the patient cannot open wider, lift the patient's lid, paying attention not to press against the eyeball. • The data may exceed the measurable limit.
Errors such as "PRESSURE PEAK ERROR", "PRESSURE SLOPE ERROR" or "NO PRESURE UP" are printed out at device start-up.	• Turn off the power while in Measurement mode and clean the contamination from air nozzle. • See "4.5.1 Cleaning air nozzle" (page 71).

If the symptom cannot be corrected with the above actions, contact NIDEK or your authorized distributor.

4.2 Error Messages and Countermeasures

If one of the following error codes is displayed on the screen or printed out, follow the suggestions in the cause and countermeasure column.
The error code, detailed indications and serial number of your device are helpful in proper servicing.

Error code	Cause and countermeasure
ERR001	• Data error of backup memory (EEPROM) Data loss due to exogenous noise such as static electricity or malfunction of electric circuit board or EEPROM on the electric circuit board is probable. • If the same error code is displayed again even after the device is turned off and on again, shut off the device and contact NIDEK or your authorized distributor.
ERR002	• Date and time setting error The built-in battery has been discharged after about one month of nonuse or longer, and the date and time settings went wrong, or malfunction of electric circuit board or timer IC on the electric circuit board is probable. • If the same error code is displayed again even after the date and time are reset in the parameter setting mode, shut off the device and contact NIDEK or your authorized distributor.
ERR011	• Error related to control signals for communication (output port) Ensure that the interface cable is properly connected to the output port. • Also ensure that the communication parameters are properly set.
ERR012	• Error related to control signals for communication (output port) Ensure that the interface cable is properly connected to the output port. • Also ensure that the communication parameters are properly set.
ERR013	• Error related to communication data (output port) Ensure that the interface cable is properly connected to the output port. • Also ensure that the communication parameters are properly set.
ERR014	• Error related to communication data (output port) Ensure that the interface cable is properly connected to the output port. • Also ensure that the parameters related to communication are properly set.
ERR015	• Error related to communication data (output port) Ensure that the interface cable is properly connected to the output port. • Also ensure that the communication parameters are properly set.
ERR016	• Error related to communication data (output port) Ensure that the interface cable is properly connected to the output port. • Also ensure that the communication parameters are properly set.
ERR017	• Error related to communication data (output port) Ensure that the interface cable is properly connected to the output port. • Also ensure that the communication parameters are properly set.
ERR018	• Error related to communication data (output port) Ensure that the interface cable is properly connected to the output port. • Also ensure that the communication are properly set.
NO DAT	• Error related to communication data (output port) Ensure that the interface cable is properly connected to the output port. • Also ensure that the communication parameters are properly set.
ERR031	• Error related to the up-and-down tracking Malfunction of the up-and-down motor, up-and-down sensor, electric circuit board, or break in cables is probable. • Shut off the device and contact NIDEK or your authorized distributor.

Error code	Cause and countermeasure
ERR034	• Error related to the motorized chinrest Malfunction for the chinrest motor, motorized chinrest sensor, or electric circuit board, or break in cables is probable. • Shut off the device and contact NIDEK or your authorized distributor.
NO PAPER	• Error related to the printer If the printer is short of paper, refill paper. If the printer cover is open, close it securely. • If the same error code is displayed even after the replacement of printer paper roll, malfunction of the printer, electric circuit board, or break in cables is probable. Shut off the device and contact NIDEK or your authorized distributor.
ERR201	• Locking of the piston, a malfunction of the solenoid positional sensor, or a break in the cable is probable. If the start button of the joystick is pressed while the PISTON error is displayed, the piston is driven by a driving force that is stronger than usual, and the locked piston may be released. • If the same error code is displayed when the start button is pressed, shut off the device and contact NIDEK or your authorized distributor.
ERR202	• Error related to the charging for the NT measurement A malfunction of the transformer, or electric circuit board, or a break in a cable is probable. • Shut off the device and contact NIDEK or your authorized distributor.
ERR601	• Error related to a connecting device Equipment other than USB flash drive and barcode / magnetic card reader is connected to USB-A port and started. • Remove the connected equipment then restart the NT-510.
ERR602	• Error related to a connecting device A USB flash drive or a barcode / magnetic card reader connected to USB-A port was not recognized. • If the same error code is displayed even if the other USB flash drive is connected, turn the power of the device off and contact NIDEK or your authorized distributor.
ERR700	• Error related to Windows file sharing
ERR703	• Error related to IC IC was damaged by any cause such as electrostatic discharge. • If the same error code is displayed even after the device is turned on again, turn off power to the device and contact NIDEK or your authorized distributor.
ERR704	• Error related to DHCP The IP address cannot be obtained.
ERR750	• Error related to network access Enabling access to the network may take a while after the device start-up. • Check the LAN cable connection and the IP address and subnet mask in the Network setting in the Utility screen.
ERR751	• Error related to network writing Write-protection is enabled or no free space is left. • Check if the Write permission is granted to the destination folder in the PC and sufficient free space is left.
ERR754	• Error related to the computer name The computer of the specified name does not exist. • Check the connection of the LAN cable. Or check that the specified PC name is proper.
ERR755	• Error related to the read-only attribute. The shared folder in the computer is read-only attribute and cannot be wrote. • Disable the write-protection on the shared folder.

Error code	Cause and countermeasure
ERR756	• Error related to log on. Logging on to the PC is not allowed. (The user name or password is incorrect.) • Check the user name and password and input correctly.
ERR757	• Error related to the shared folder. The shared folder does not exist. (The name of the shared folder is incorrect.) • Check the folder name and whether the folder is set to share.
ERR758	• Error related to time-out. The PC did not finish the process in a specified time. • Send the data again.
ERR759	• Error related to deletion. The data cannot be deleted. (Deletion was tried on the data with the read-only attribute.) • Disable the write-protection.
ERR760	• Error indicating that the network is being initialized. (The initialization takes a while after the device startup.) • Retry access to the Network later.
ERR761	• Error indicating that access is not allowed. Folder sharing setting is improper. • Check the setting for the file sharing of the computer.
ERR762	• Error related to account. The account is disabled. (The user setting is improper.) • Check the network setting of the device.
ERR763	• Error related to read. The file cannot be read.
ERR771	• Error related to the cable connection. LAN cable is not connected. • Connect the cable or check the connection of the port.
ERR772	• Error related to response. The PC side receiving software could not delete the data within the required time frame (5 seconds after reception). Check the settings of the PC side receiving software.

4.3 Replacing Printer Paper

When a red line appears on the side of printer paper, it means that paper is running short.
In such a case, stop using the printer and replace printer paper with new one.

Note

- Do not run the printer when printer paper is not loaded.
  It may ruin the printer head.
- Do not pull the paper in the printer forcefully.
  This may cause malfunction of the printer.

1 Press the cover open button to open the printer cover.

2 Remove the used printer paper.

⚠ **CAUTION**

- **Do not touch the printer head at the top of the opened printer cover.**
  The printer head is hot right after printing and you may get burned.

3 Insert new printer paper.

Load printer paper as shown in the picture on the right.

Set printer paper so that its end is exposed from the cover.

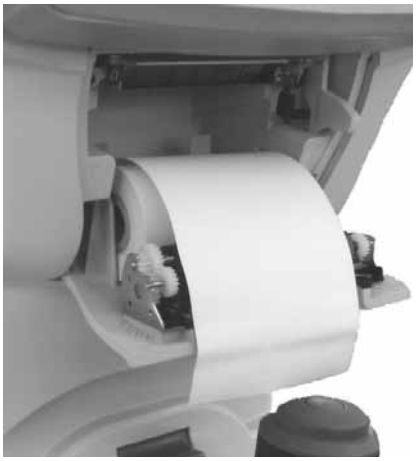

Note

- If the roll is loaded in such a way that paper becomes upside down, it is not possible to print data out.
- Be sure that printer paper is not loaded in a tilted position, the core of the roll is properly placed, or there is no slack in the roll.

  Printer paper may not be fed properly.

4 Push the printer cover toward the main body.

Press the printer cover at both ends to close the cover securely.

Note

- Be sure that the cover is securely closed.

  If the cover is insecurely closed, the auto cutter may not operate properly. In addition, when the print button is pressed, “ERROR” or “NO PAPER” may appear and printing will not occur.

4.4 Fixing Chinrest Paper

1 Disconnect the two fixing pins from the chinrest.

2 Remove a proper number of chinrest papers from the pack.

It is impossible to fix the whole pack of chinrest paper. Be sure to fix a stack with a thickness of 6 mm of less.

Pay attention not to scatter chinrest paper.

3 Pass the fixing pins through chinrest paper.

Pass the fixing pins through both holes of the stack of paper.

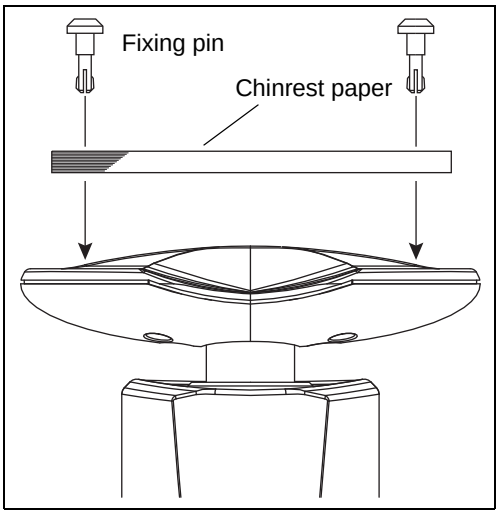

4 Fix the stack of chinrest paper onto the chinrest.

1) Insert the pins into the holes in the chinrest while holding both fixing pins and stack of paper.
2) Push the pins into the holes of the chinrest.

4.5 Cleaning

When the cover or panel of the device becomes dirty, wipe with a soft cloth. For stubborn dirt, immerse the cloth in a neutral detergent, wring well, and wipe. Finally wipe with a dry and soft cloth.

⚠ **CAUTION**

- **Never use an organic solvent such as paint thinner.**
  It may ruin the surface of the device.
- **Lightly wipe the exterior of the LCD display. Do not press the LCD display using an object with a hard tip. In addition, keep magnetic objects away from the LCD display.**
  Scratches or failure of the LCD display may result.
- **Never use a sponge or cloth soaked in water.**
  The water may leak into the inside of the device and cause device failure.

4.5.1 Cleaning air nozzle

⚠ **CAUTION**

- **After use on the patients with an infection, be sure to clean the air nozzle with a cotton swab dampened with rubbing alcohol.**
  Infected tears may be scattered and come into contact with the air nozzle then scattered again, causing a secondary infection.

Note

- Pay attention not to let dust or foreign particles into the air nozzle during cleaning.

1 Check the glass part of the air nozzle from an oblique direction for dust, soiling, etc.

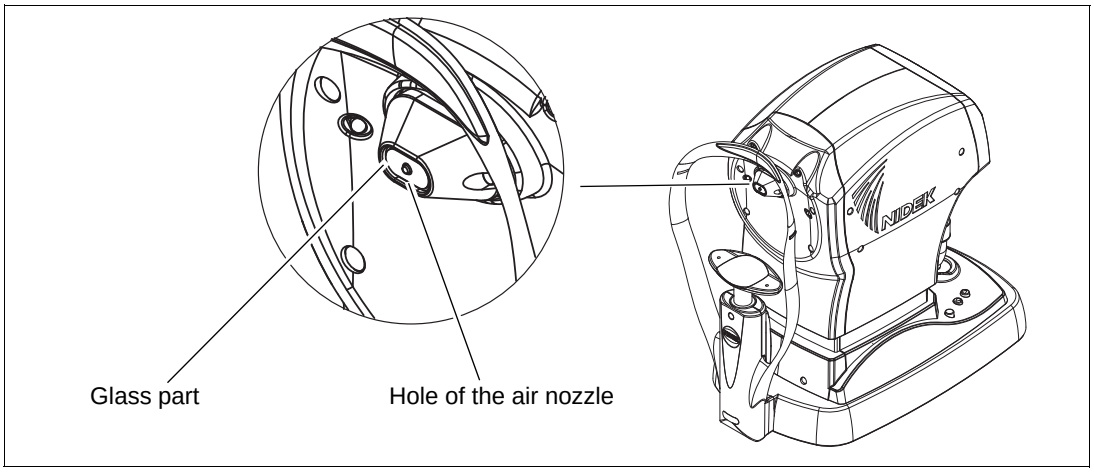

2 Blow the dust, foreign particles etc. off with a blower if they are settled.

3 **Gently wipe the glass part with a cotton swab dampened with methanol or absolute alcohol.**

⚠ **CAUTION** • Gently wipe the air nozzle without rubbing or without wiping it with foreign particles settled. The glass part may be scratched.

4 **Check the glass part for soiling again.**

4.5.2 Cleaning printer

After repeated usage, the paper slot of the auto cutter of the printer may become soiled with powdery paper. If the powdery paper settles, malfunction of the auto cutter may result. Check the auto cutter before using the device. Clean it if it is soiled.

1 **Open the printer cover and remove the printer paper roll**.

See “4.3 Replacing Printer Paper” (page 68).

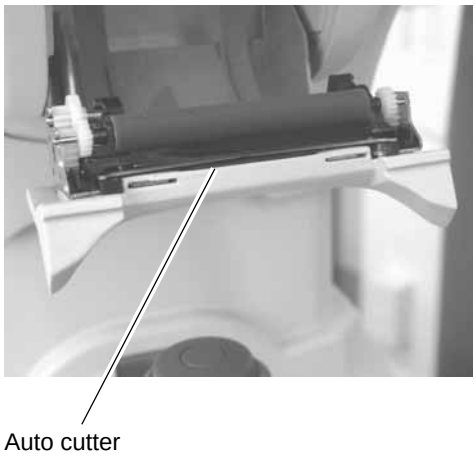

2 **Apply the nozzle of a vacuum cleaner to the auto cutter to remove powdery paper.**

Never blow off powdery paper with a blower. If powdery paper settles on the internal working structure, malfunction may result.

3 **Supply the printer paper as it was.**

4.5.3 Cleaning forehead rest and chinrest

During measurement, sweat or cosmetic etc. of the patients may be smeared on the forehead rest or chinrest.
Perform cleaning before measuring the next patient.

⚠ **CAUTION** • **Before or after use of the device, and before treating each patient, wipe the forehead rest and chin rest with a clean cloth such as gauze dampened with rubbing alcohol.**
If chinrest paper is used, remove one piece for each patient.
For severe stains, wipe the area not with a dry cloth but with gauze dampened with alcohol.

4.6 List of Replacement Parts

Part name	Part number	Note
Printer paper	80620-00001	Width 58 mm, Length 25 m
Chinrest paper	32903-M047	Pack of chinrest paper

After replacing consumables, restock them.

5. SPECIFICATIONS AND ACCESSORIES

5.1 Classifications

[Form of protection against electrical shock] Class I

The NT-510 is classified as a Class I device.

A Class I is a device in which the protection against electric shock does not rely on basic insulation only, but which includes an additional safety precaution in such a way that means are provided for the connection of the device to the protective (ground) conductor in the fixed wiring of the installation in such a way that accessible metal parts can not become live in the event of a failure in the basic insulation.

Use a power outlet which is equipped with a grounding terminal.

[Degree of protection against electrical shock] Type B applied part

The NT-510 is classified as a device with a Type B Applied Part.

A Type B Applied Part provides a particular degree of protection against electrical shock, particularly regarding the following:

- allowable leakage currents
- reliability of the protective earth connection (if present)

[Degree of protection against harmful ingress of liquids] IPX0

The NT-510 provides no protection against ingress of water or particular matter with harmful effects. Avoid splashing water or other liquids on or near the device.

[Method (s) of sterilization or disinfection recommended by the manufacturer]

The NT-510 is a device that does not contain parts that need disinfecting.

[Degree of safety in the presence of a flammable anesthetic mixture with air, or a flammable anesthetic mixture with oxygen or nitrous oxide]

The NT-510 is classified as a device not suitable to be used in the presence of a flammable anesthetic mixture with air, or a flammable anesthetic mixture with oxygen or nitrous oxide caused by leakage or a discharge.

[Mode of operation]

The NT-510 is a continuous operation device.

[Mode of transport]

Stationary equipment.

5.2 Safety Features

To ensure safe use, the device is provided with the following safety features.

<Patient sensor>

Verifies that no patient is in front of the NT-510 when checking the puffed air.

When the sensor detects the patient, the puffed air check is not performed.

<Safety stopper>

For safety, this stopper provides a safety space so that the air nozzle does not touch a patient's eye during measurements.

The amount of space needed for safety depends on the patient. Change the position of the stopper for each patient to ensure the proper amount of space for safety.

5.3 Specifications

○ Measurement of intraocular pressure

- Measurable range 1 to 60 mmHg
- Intraocular pressure measurement value
  Less than 1 mmHg: Displayed as 1 mmHg
  1 to 60 mmHg: Measurement value in 1 mmHg integers
  Average value: Measurement value in units of 0.1 mmHg
  60 mmHg or higher: OVR display
- Measurement range
  APC40, APC60, 40, 60
- Working distance 11 mm
- Chart Fixation target: Green
  (Selectable between the bilking target and continuously-lit target)

○ Working range of auto-tracking

- Up and down 32 mm or more

○ Movable range of horizontal direction (by joystick)

- Back and forth 36 mm or more
- Right and left 85 mm or more

○ Other functions

- Alignment/observation method
  5.7-inch color LCD display
- Printer Thermal line printer with auto cutter
  Width 58 mm
- Interface connectors
  RS-232C: 1 port (OUT)
  USB: 1 port
  LAN: 1 port

○ Dimensions and mass

- Dimensions 260 mm (W) × 481 mm (D) × 457 mm (H)
- Mass 19 kg
- Power source AC 100 to 240 V ±10% 50/60 Hz
- Power consumption 100 VA

○ Environmental conditions (during use)

- Temperature 10 to 35°C (50 to95°F)
- Humidity 30 to 90% (No condensation)
- Atmospheric pressure
  800 to 1060 hPa
- Other No dust nor smoke

○ Environmental conditions (during transport and storage)

- Temperature -10 to 55°C (14 to 131°F)
- Humidity 10 to 95% (No condensation)
- Atmospheric pressure
  700 to 1060 hPa

○ Others

- Expected service life (defined by manufacturer)
  8 years from the date of initial operation
  * Proper maintenance is necessary.
- Packing unit 1 unit

5.4 Standard Configuration

5.4.1 Standard accessories

• Printer paper	3 rolls
• Power cord	1 unit
• Dust cover	1 unit
• Fixing pins for chinrest paper	2 units
• Pack of chinrest paper	1 unit
• Operator’s manual	1 volume

5.4.2 Optional accessories

- Magnetic card reader
- Barcode reader
- Interface cable (RS-232C)

6. EMC (ELECTROMAGNETIC COMPATIBILITY)

The NT-510 complies with the International Electrotechnical Commission standards (IEC 60601-1-2: 2007) for electromagnetic compatibility as listed in the tables below. Follow the guidance in the tables for use of the device in an electromagnetic environment.

EMC (IEC 60601-1-2: 2007)

Guidance and manufacturer's declaration - electromagnetic emissions		
The NT-510 is intended for use in the electromagnetic environment specified below. The customer or the user of the NT-510 should assure that it is used in such an environment.		
Emissions test	**Compliance**	**Electromagnetic environment - guidance**
RF emissions CISPR 11	Group 1	The NT-510 uses RF energy only for its internal function. Therefore, its RF emissions are very low and are not likely to cause any interference in nearby electronic equipment.
RF emissions CISPR 11	Class B	The NT-510 is suitable for use in all establishments, including domestic establishments and those directly connected to the public low-voltage power supply network that supplies buildings used for domestic purposes.
Harmonic emissions IEC 61000-3-2	*1	
Voltage fluctuations/ Flicker emissions IEC 61000-3-3	*2	

***1 For the regions where the rated voltage is 220 V or greater, this device complies with class A. For the regions where the rated voltage is 127 V or less, this standard is not applicable.**

***2 For the regions where the rated voltage is 220 V or greater, this device complies with this standard. For the regions where the rated voltage is 127 V or less, this standard is not applicable.**

Guidance and manufacturer's declaration - electromagnetic immunity			
The NT-510 is intended for use in the electromagnetic environment specified below. The customer or the user of the NT-510 should assure that it is used in such an environment.			
Immunity test	**IEC 60601 test level**	**Compliance level**	**Electromagnetic environment - guidance**
Electrostatic Discharge (ESD) IEC 61000-4-2	±6 kV contact ±8 kV air	±6 kV contact ±8 kV air	Floor should be wood, concrete or ceramic tile. If floors are covered with synthetic material, the relative humidity should be at least 30%.
Electrical fast transient/burst IEC 61000-4-4	±2 kV for power supply lines ±1 kV for input/output lines	±2 kV for power supply lines ±1 kV for input/output lines	Mains power quality should be that of a typical commercial or hospital environment.
Surge IEC 61000-4-5	±1 kV differential mode ±2 kV common mode	±1 kV differential mode ±2 kV common mode	Mains power quality should be that of a typical commercial or hospital environment.
Voltage, dips, short interruptions and voltage variations on power supply input lines IEC 61000-4-11	<5% U_T (>95% dip in U_T) for 0.5 cycle 40% U_T (60% dip in U_T) for 5 cycles 70% U_T (30% dip in U_T) for 25 cycles < 5% U_T (> 95% dip in U_T) for 5 sec	<5% U_T (> 95% dip in U_T) for 0.5 cycle 40% U_T (60% dip in U_T) for 5 cycles 70% U_T (30% dip in U_T) for 25 cycles < 5% U_T (> 95% dip in U_T) for 5 sec	Mains power quality should be that of a typical commercial or hospital environment. If the user of the NT-510 requires continued operation during power mains interruptions, it is recommended that the NT-510 be powered from an uninterruptible power supply or a battery.
Power frequency (50/60 Hz) magnetic field IEC 61000-4-8	3 A/m	3 A/m	Power frequency magnetic fields should be at levels characteristic of a typical location in a typical commercial or hospital environment.
NOTE U_T is the a.c. mains voltage prior to application of the test level.			

Guidance and manufacturer's declaration - electromagnetic immunity			
The NT-510 is intended for use in the electromagnetic environment specified below. The customer or the user of the NT-510 should assure that it is used in such an environment.			
Immunity test	**IEC 60601 test level**	**Comliance level**	**Electromagnetic environment - guidance**
Conducted RF IEC 61000-4-6	3 Vrms 150 kHz to 80 MHz	3 Vrms (V_1=3)	Portable and mobile RF communications equipment should be used no closer to any part of the NT-510, including cables, than the recommended separation distance calculated from the equation applicable to the frequency of the transmitter. **Recommended separation distance** $d=1.2\sqrt{P}$ 150 kHz to 80 MHz
Radiated RF IEC 61000-4-3	3 V/m 80 MHz to 2.5 GHz	3 V/m (E_1=3)	$d=1.2\sqrt{P}$ 80 MHz to 800 MHz $d=2.3\sqrt{P}$ 800 MHz to 2.5 GHz where *P* is the maximum output power rating of the transmitter in watts (W) according to the transmitter manufacturer and *d* is the recommended separation distance in metres (m). Field strengths from fixed RF transmitters, as determined by an electromagnetic site survey,[a] should be less than the compliance level in each frequency range.[b] Interference may occur in the vicinity of equipment marked with the following symbol:
NOTE 1 At 80 MHz and 800 MHz, the higher frequency range applies. NOTE 2 These guidelines may not apply in all situations. Electromagnetic propagation is affected by absorption and reflection from structures, objects and people.			
[a] Field strengths from fixed transmitters, such as base stations for radio (cellular/cordless) telephones and land mobile radios, amateur radio, AM and FM radio broadcast and TV broadcast cannot be predicted theoretically with accuracy. To assess the electromagnetic environment due to fixed RF transmitters, an electromagnetic site survey should be considered. If the measured field strength in the location in which the NT-510 is used exceeds the applicable RF compliance level above, the NT-510 should be observed to verify normal operation. If abnormal performance is observed, additional measures may be necessary, such as reorienting or relocating the NT-510. [b] Over the frequency range 150 kHz to 80 MHz, field strengths should be less than 3 V/m.			

Recommended separation distances between portable and mobile RF communications equipment and the NT-510			
The NT-510 is intended for use in an electromagnetic environment in which radiated RF disturbances are controlled. The customer or the user of the NT-510 can help prevent electromagnetic interference by maintaining a minimum distance between portable and mobile RF communications equipment (transmitters) and the NT-510 as recommended below, according to the maximum output power of the communications equipment.			
Rated maximum output power of transmitter W	**Separation distance according to frequency of transmitter m**		
	150 kHz to 80 MHz $d=1.2\sqrt{P}$	**80 MHz to 800 MHz** $d=1.2\sqrt{P}$	**800 MHz to 2.5 GHz** $d=2.3\sqrt{P}$
0.01	0.12	0.12	0.23
0.1	0.38	0.38	0.73
1	1.2	1.2	2.3
10	3.8	3.8	7.3
100	12	12	23
For transmitters rated at a maximum output power not listed above, the recommended separation distance *d* in metres (m) can be estimated using the equation applicable to the frequency of the transmitter, where *P* is the maximum output power rating of the transmitter in watts (W) according to the transmitter manufacturer. NOTE 1 At 80 MHz and 800 MHz, the separation distance for the higher frequency range applies. NOTE 2 These guidelines may not apply in all situations. Electromagnetic propagation is affected by absorption and reflection from structures, objects and people.			

7. GLOSSARY

●APC (Automatic Puff Control)

The function which performs the normal measurement initially, however, in subsequent measurements, automatically reduces the air pressure in order to measure using more gentle puff of air.

●Applanation

To flatten the cornea by pressing it with air pressure.

●Auto shot

This function automatically starts measurements as soon as the device is best aligned and focuses on the eye.

●Auto-tracking

A function where the device automatically controls the up and down movements for alignment.

●Automatic shutoff function

When measurement is finished, this function activates to stop puffing air to eliminate extra puffing. This function decreases uncomfortableness and stimuli during measurements.

●Comments

Up to 24 desired characters and symbols can be entered in two lines.

●Eyelid detection mode

In this mode, eyes are constantly checked for the condition of opening. NT measurement takes place only when the eye is opened wide enough.

It is recommended to select this mode for normal measurement.

●Expected service life

A period of time beyond which the reliability and safety of the system cannot be guaranteed even with normal use and regular maintenance that involves proper exchange of maintenance and consumable parts, repair, and overhaul.

●Focusing indicator

The indicator which shows the distance between the corneal center of the patient's eye and the tip of the air nozzle. For the NT measurement, there are two display types.

● Limit mark

When the main body gets out of the working range of auto-racking, the limit marks (arrows) are displayed on the screen.

●Low confidence data

Measured data with a “*” indication. This is displayed on the screen when measurement is performed in spite of a measurement error (APL or ALM). As the confidence of the measured data is low, this kind of measured data is called “Low confidence data”.

●Measurement range

The range in which measurement can be performed. There are four types of measurement ranges: “APC 40”, “APC 60”, “40”, “60” so that the most accurate measurement can be performed according to the intraocular pressure of the patient and its fluctuation.

Normally, select “APC 40” or “APC 60”.

●Puff

To burst air onto the cornea of the patient’s eye for measurement or to blow out air. The pressure necessary for applanation is called “air pressure” in this manual.

●Safety space

The space maintained by the safety stopper so that the tip of the air nozzle does not touch the cornea. Normally, the safety space is 8 to 10 mm.

8. INDEX

A

Air nozzle 5, 71
Applanation area 9
Auto button 8, 22
Auto shot 85
Auto shot mark 9
Automatic shutoff function 2, 85
Auto-tracking 85
Auto-tracking mark 8

C

Charge indicator 9
Chinrest 5
Chinrest up/down buttons 5
CLR button 4
Comment 57
Cover open button 4

E

Error messages 30
Eye level marker 5
Eyelid detection mode 85
Eyelid detection mode button 9

F

Focusing indicator 9, 85
Forehead rest 5
Function buttons 3

I

ID indication 10
Intraocular Pressure measurement 2

J

Joystick 4

L

LAN connector 7
LCD screen 4
Limit marks 28, 85
Locking lever 4

M

Measured values 8
Measurement range 10, 86
Memory indicator 4

P

Packing mode 35
Page button 10
Parameter button 10
Patient sensor 5, 76
Patient's eye 8
Power button 4
Power inlet 7
Print button 4
Printer cover 4

R

Range button 9
RNG 23
RS-232C connector 7

S

Safety stopper 6, 25, 76
Sleep mode 37
Start button 4

T

Target 8

U

USB-A connector 7